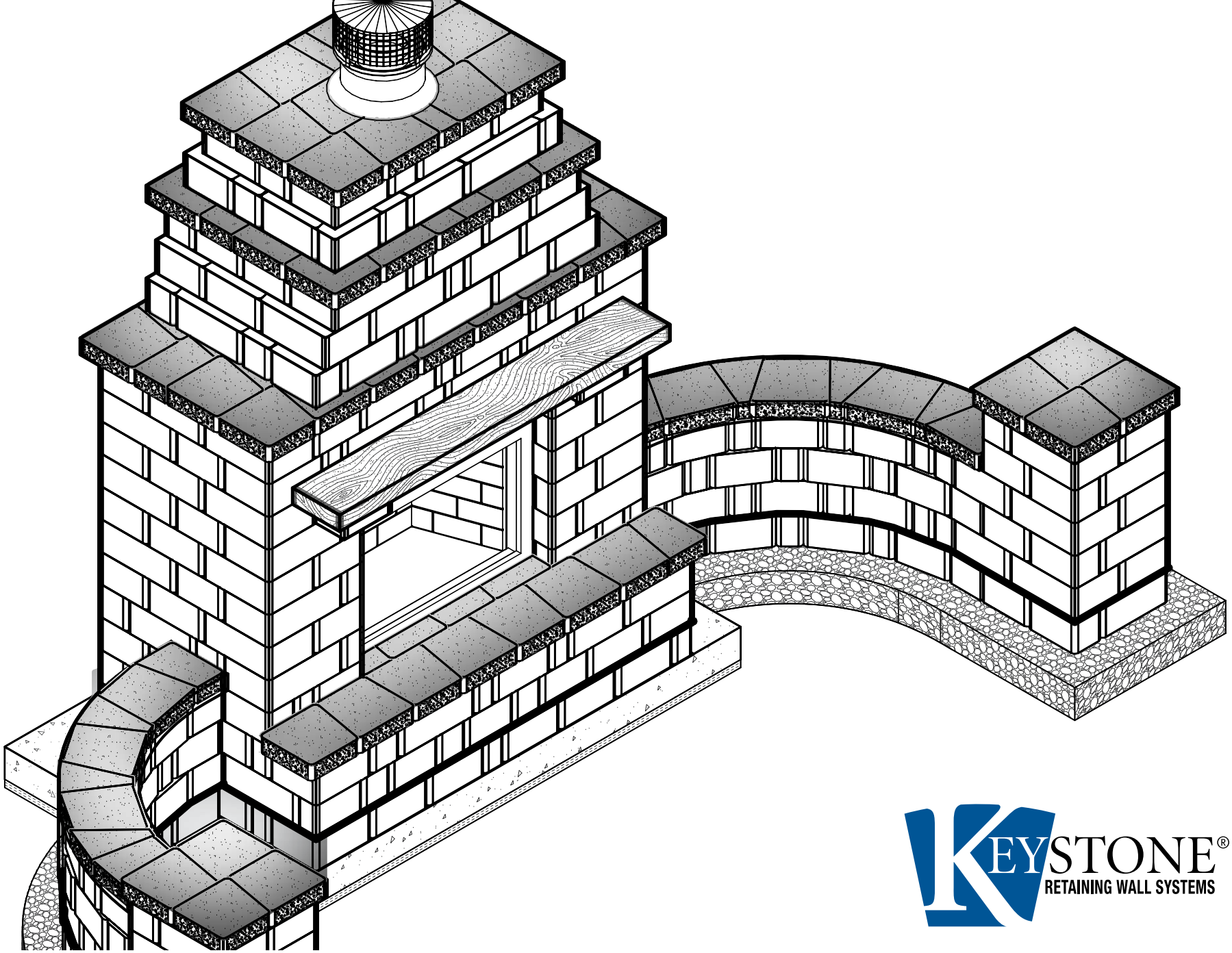

KEYSTONE®
RETAINING WALL SYSTEMS

WOOD BURNING OUTDOOR FIREPLACE W/CURVED WALLS & COLUMNS

Installation Instructions using Country Manor/Stonegate 3-pc System

Stonegate®

KEYSTONE® Country Manor®

FIREPLACE WITH CURVED WALLS & COLUMNS

KIT CONTAINS

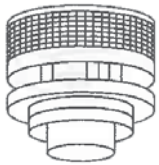

Contemporary Termination Round

12" and 48" Chimney Sections

Storm Collar

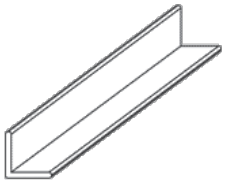

Steel Lintel

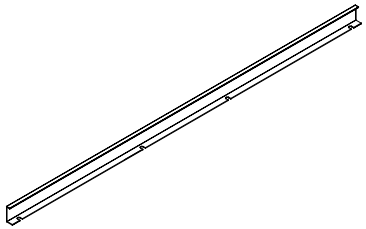

Fireplace Trim Piece

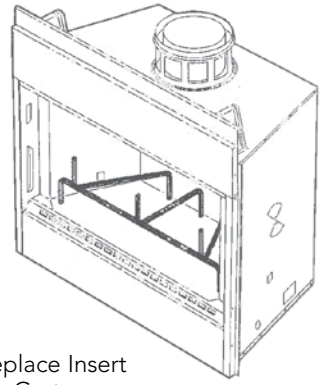

Fireplace Insert with Grate

BASIC TOOLS

SAFETY

Safety Glasses

Gloves

ALTERATIONS

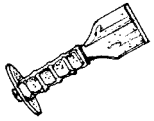

Stone Chisel

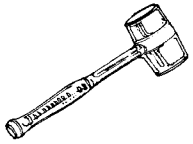

Mallet

Concrete Saw

LAYOUT

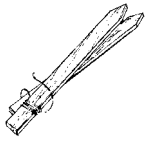

Layout Stakes

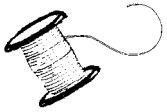

Line

LEVELING

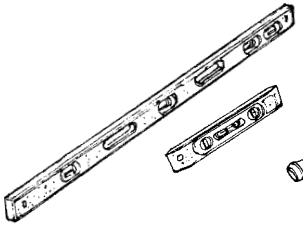

Level(s)

Mallet

GENERAL

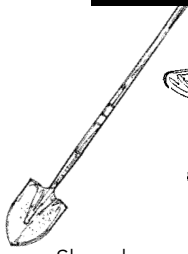

Shovel

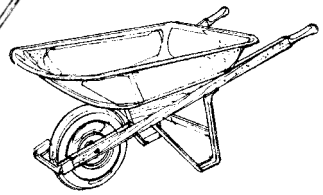

Wheel Barrow

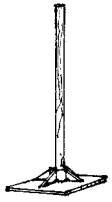

Hand Compactor

FINISHING

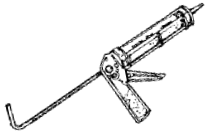

Caulking Gun

Exterior Grade Construction Adhesive

FIREPLACE WITH CURVED WALLS & COLUMNS

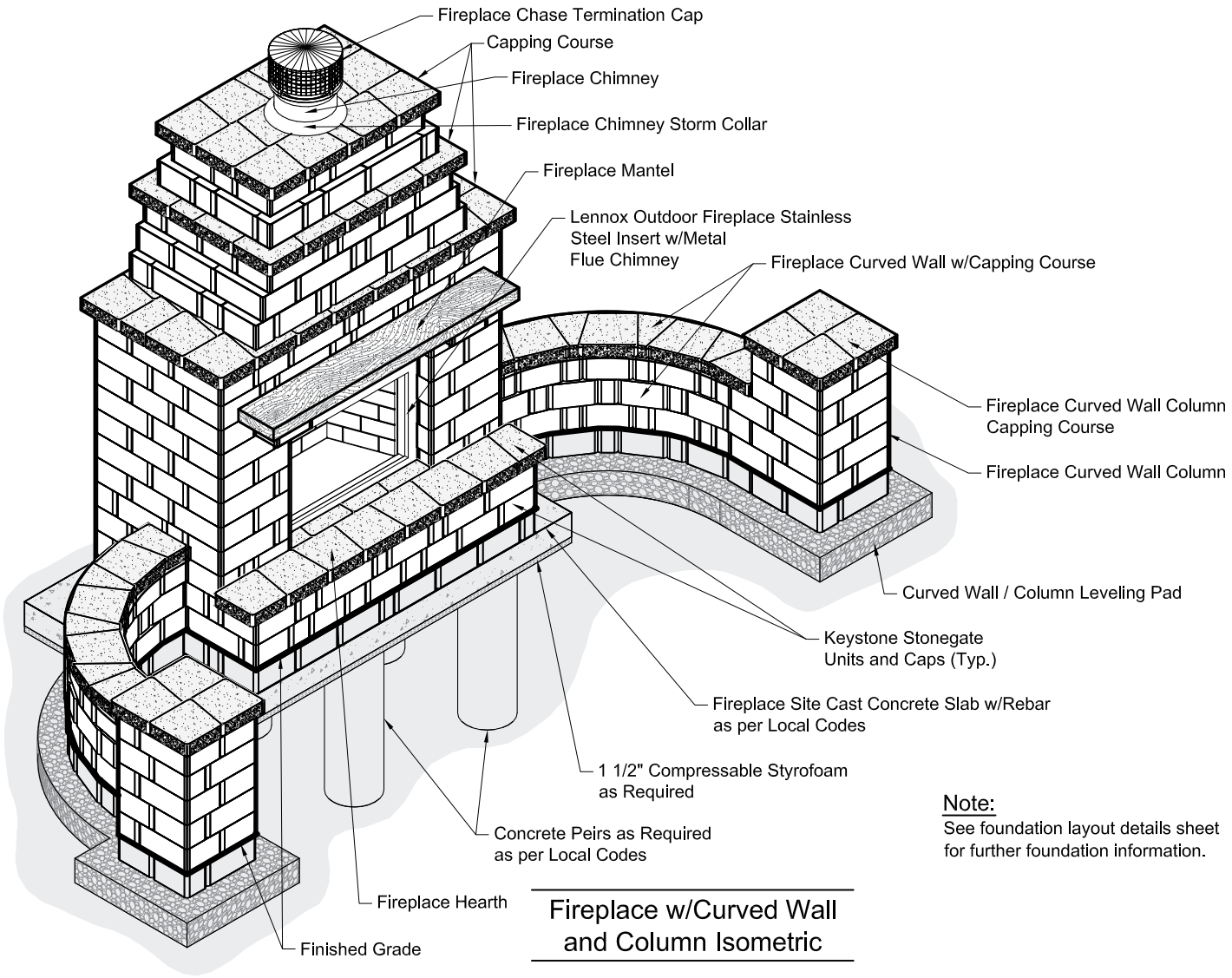

Fireplace w/Curved Wall and Column Isometric

You will need:

139 - 16"/14"w Large units

141 - 12"/10"w Medium units

175 - 6"/4"w Small units

105 - 12"/10"w Country Manor caps

600 - Interlocking Pins (approx.) (use where alignment allows)

25 - Tubes Exterior Grade Concrete Adhesive (approx.) Apply two ¼" strips of concrete adhesive on each course.

- Mantel Piece
- Fireplace Insert (contact Keystone for specs & retail options)
- Steel lintel - (1) 54"L angle
- Concrete slab material - 19.5 cf
- Curved Wall/Column pad material - 15.9 cf

Notes:

- All Keystone Country Manor and Stonegate Country Manor units are 6"h x 10"d.
- Keystone recommends the use of its interlocking pins when alignment allows. Use pins in conjunction with concrete adhesive to maximize stability of your structure.

Note:
See foundation layout details sheet for further foundation information.

General Note:
In consideration of freeze / thaw issues during the cold weather season it is recommended that this Fireplace design be protected from rain, snow and ice as necessary.

FIREPLACE WITH CURVED WALLS & COLUMNS

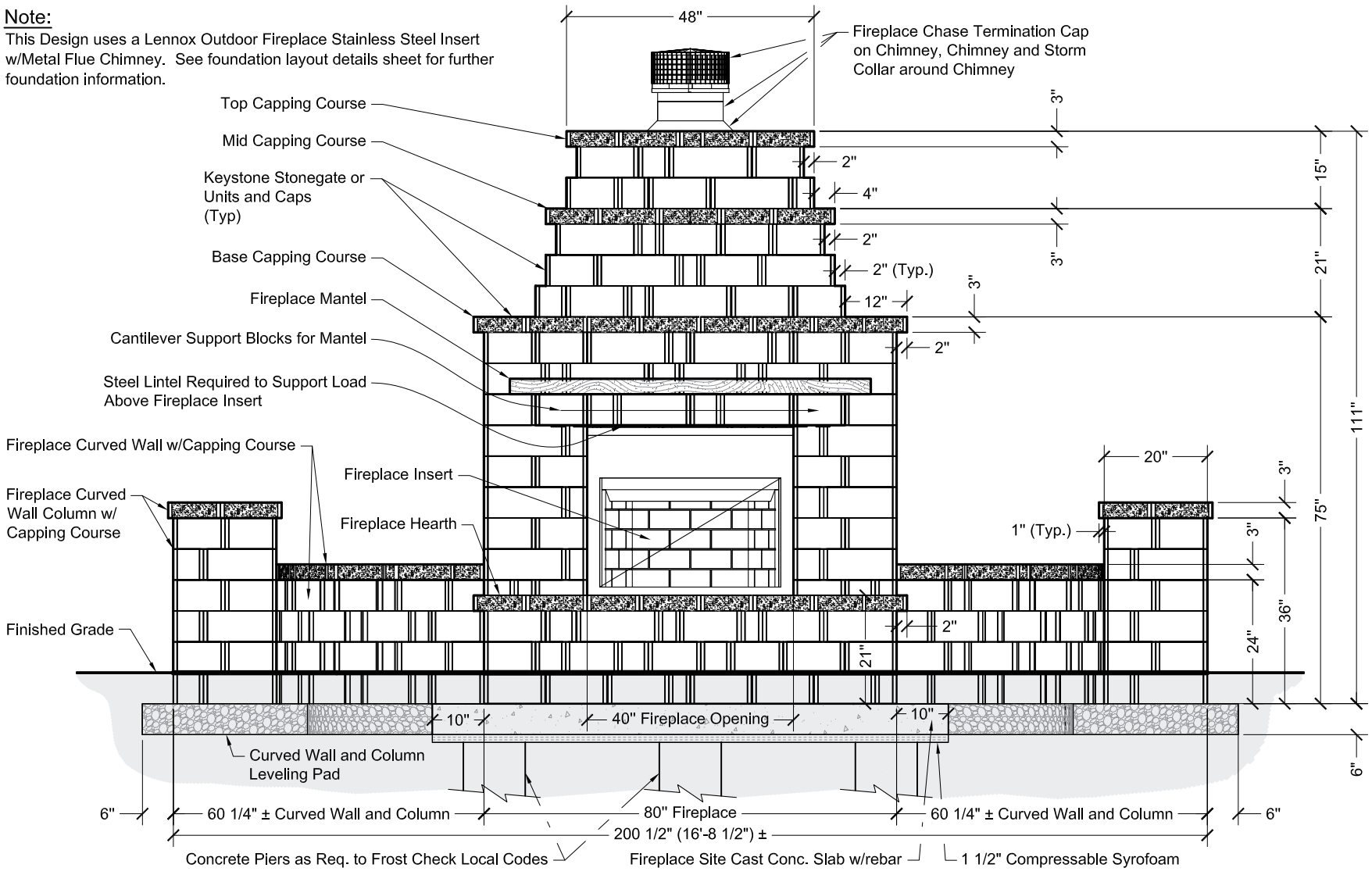

Fireplace w/Curved Wall and Column Front Elevation

Fireplace insert: See local codes for fireplace/chimney clearances and chimney extension above roof as required. Please refer to the installation manual that is included with the fireplace insert for proper installation instructions.

FIREPLACE WITH CURVED WALLS & COLUMNS

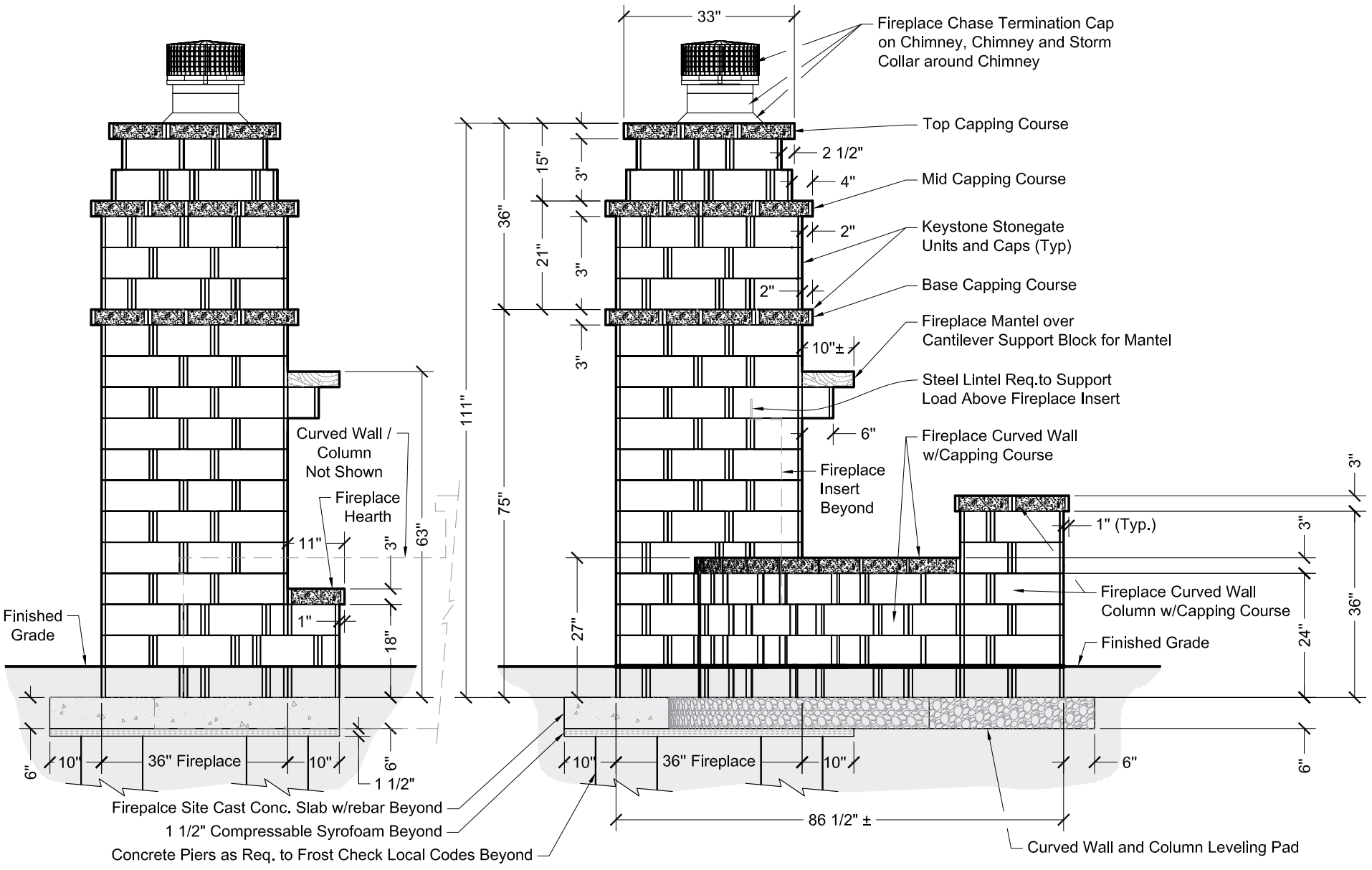

Fireplace Side Elevation - Basic

Fireplace w/Curved Wall and Column Side Elevation

Foundation Isometric

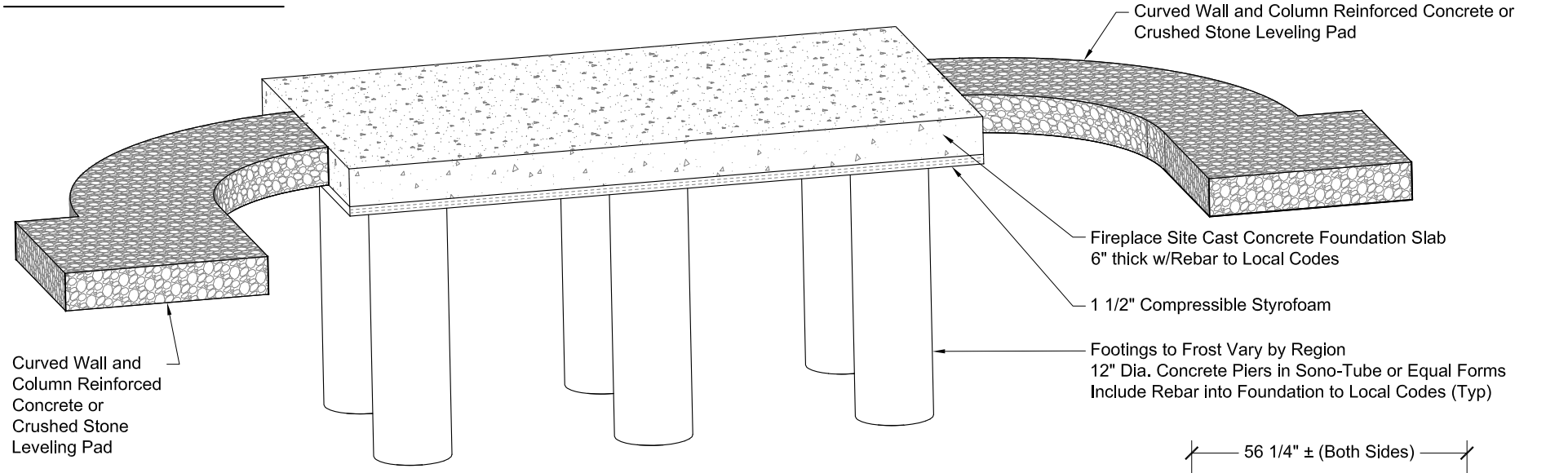

Foundation Plan

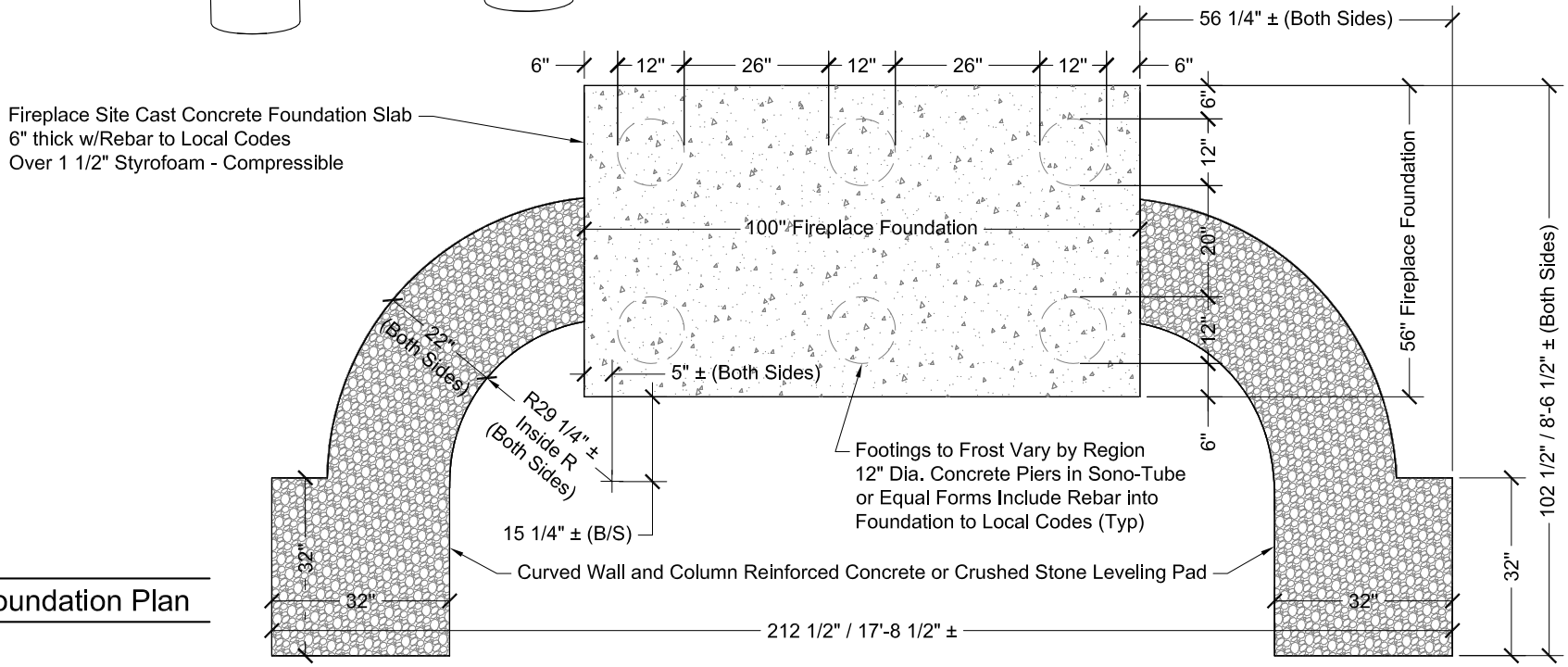

1st Course Isometric

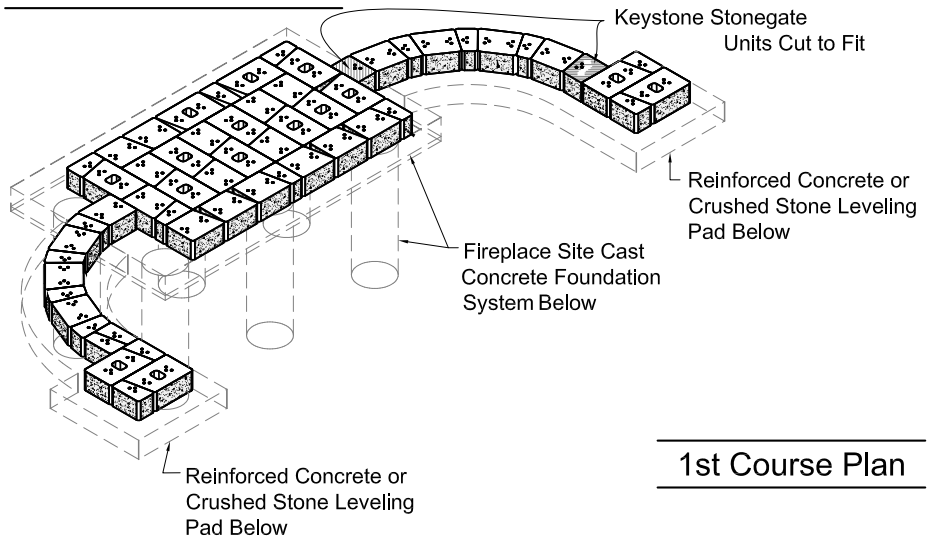

1st Course Plan

Note: Due to block outside face texture variances when building the fireplace courses, the outside dimensions of the courses may get wider than desired. If required, cut an interior perimeter unit to get the required outside dimension.

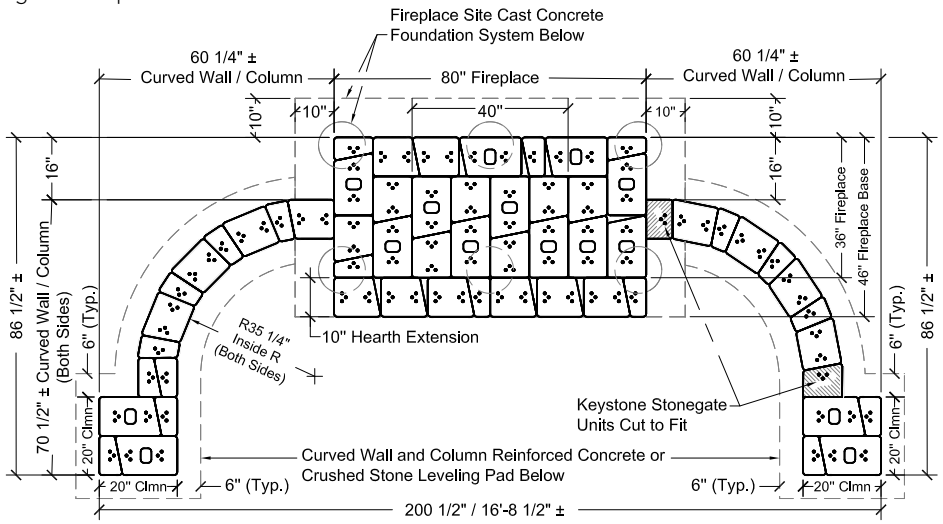

2nd Course Isometric

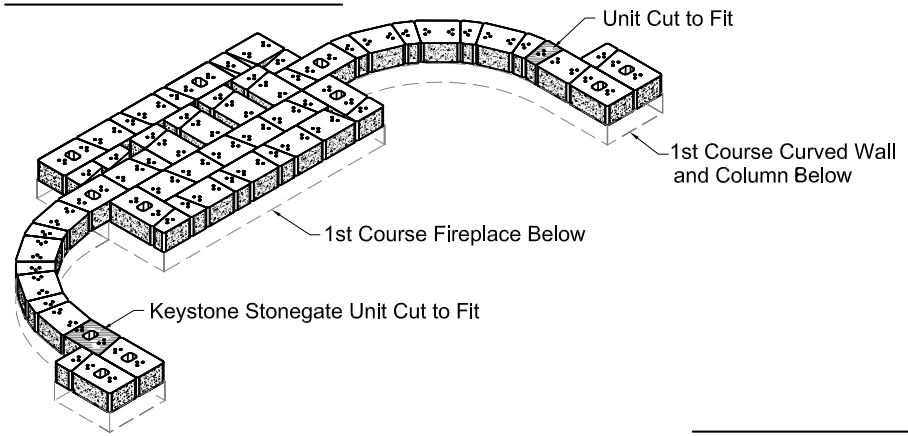

2nd Course Plan

Block Cutting Note:
Using a concrete saw or wheel grinder tool w/masonry disk, cut block units as needed.
Block units to be cut due to obstruction are labeled with solid hatching.
Block units to be cut to fit are labeled with angular hatching.

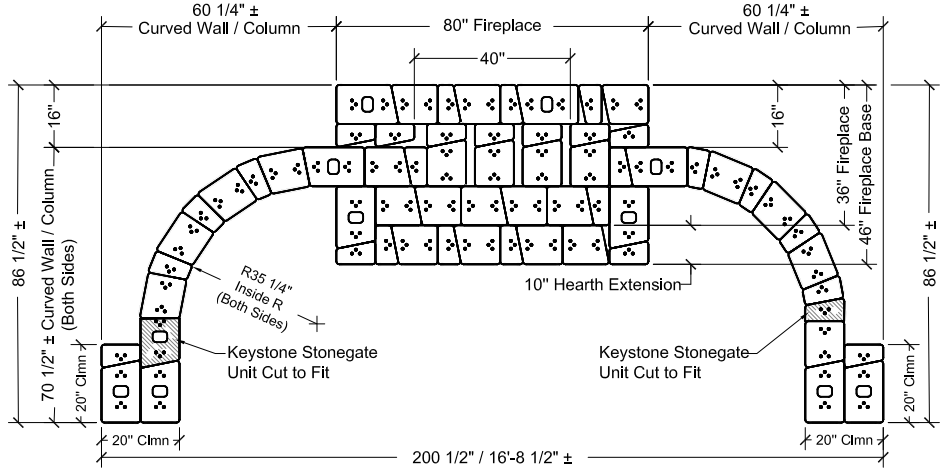

COURSE BY COURSE INSTRUCTIONS

3rd Course Isometric

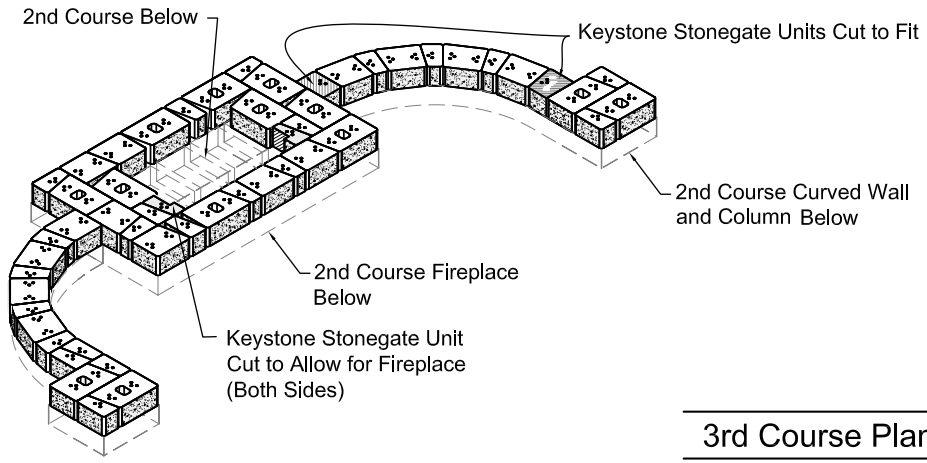

Block Cutting Note:
Using a concrete saw or wheel grinder tool w/masonry disk, cut block units as needed.
Block units to be cut due to obstruction are labeled with solid hatching.
Block units to be cut to fit are labeled with angular hatching.

3rd Course Plan

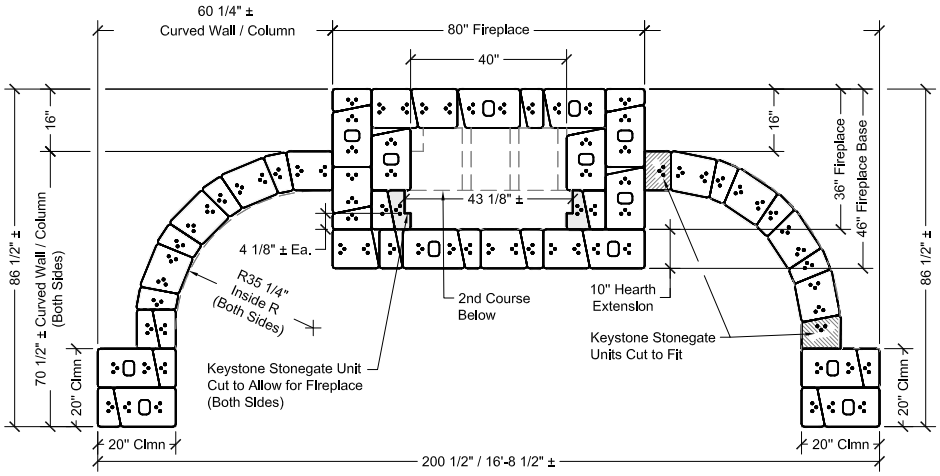

3rd Course Fireplace Base Isometric

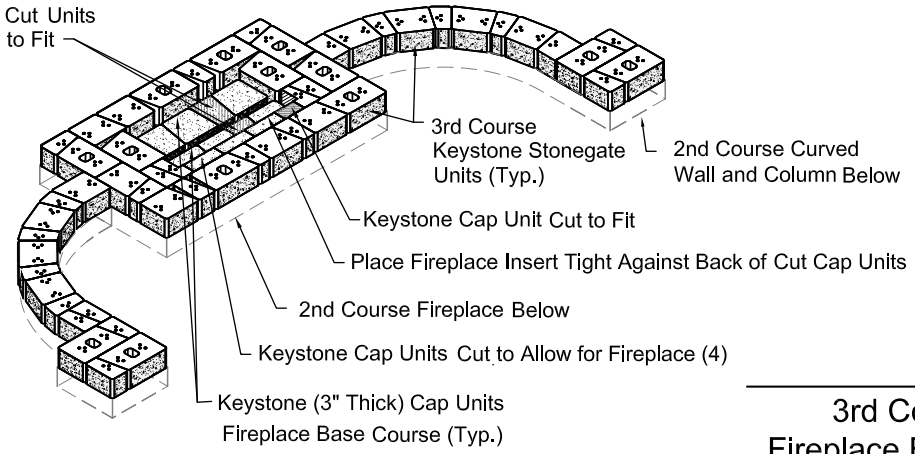

3rd Course Fireplace Base Plan

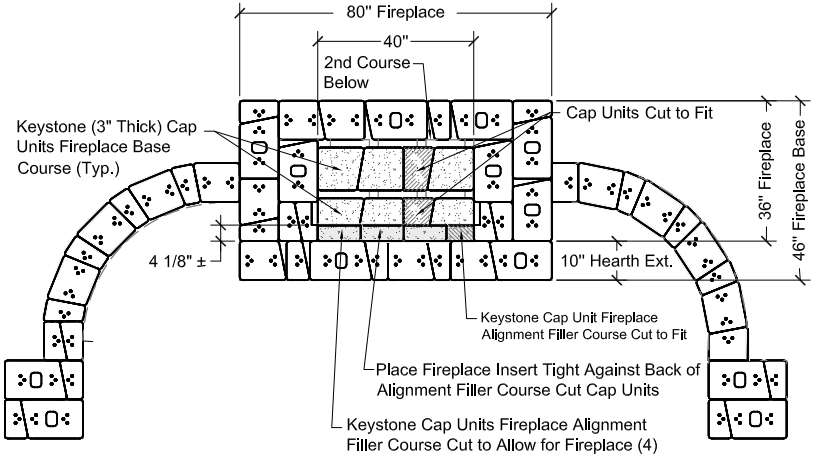

3rd Course Capping Isometric

Fireplace Note:
Install fireplace and chimney components as per fireplace manufacturers installation instructions.

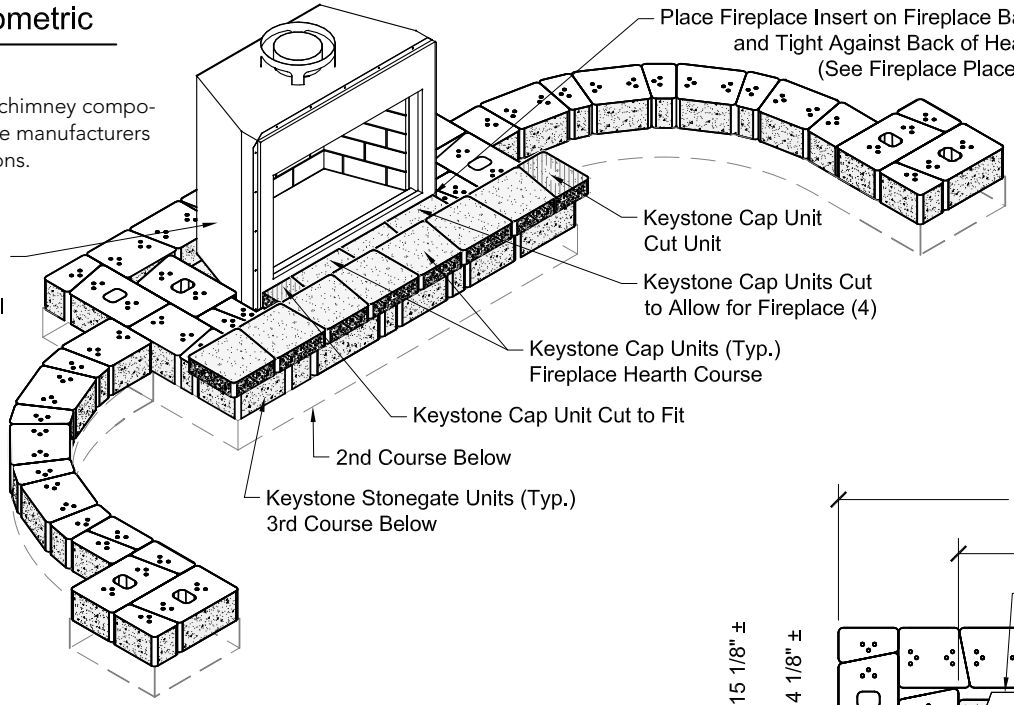

Fireplace Placement Note:
Prior to placing the fireplace insert for proper removal of the fireplace stainless steel face protective wrap, peel back the outside portions of the protective wrap where it will come in contact with block units, cap units and top trim piece.

Cap Cutting Note:
Using a conccrete saw or wheel grinder tool w/ masonry disk, cut block units as needed
Cap units to be cut due to obstruction are labeled with solid hatching.
Cap units to be cut to fit are labeled with angular hatching.

Fireplace Hearth Capping Note:
3rd course fireplace hearth capping can be placed after 4th course is in place (not shown here for display purposes).

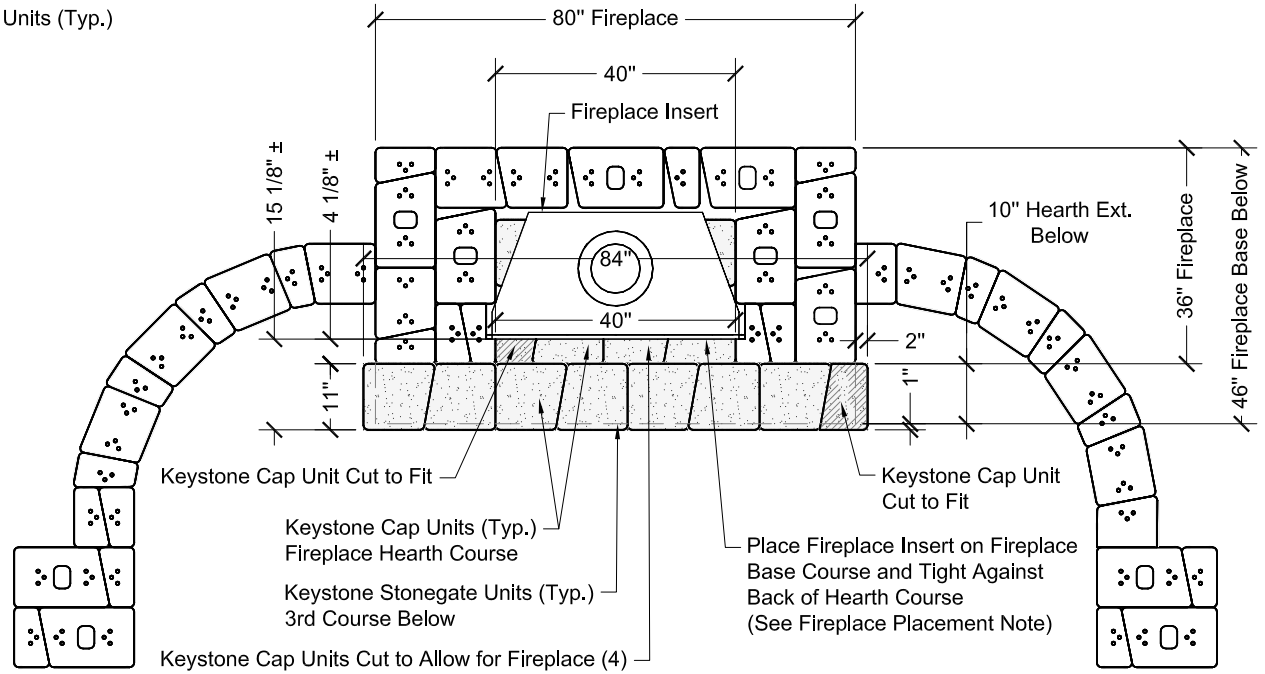

3rd Course Capping Plan

COURSE BY COURSE INSTRUCTIONS

4th Course Isometric

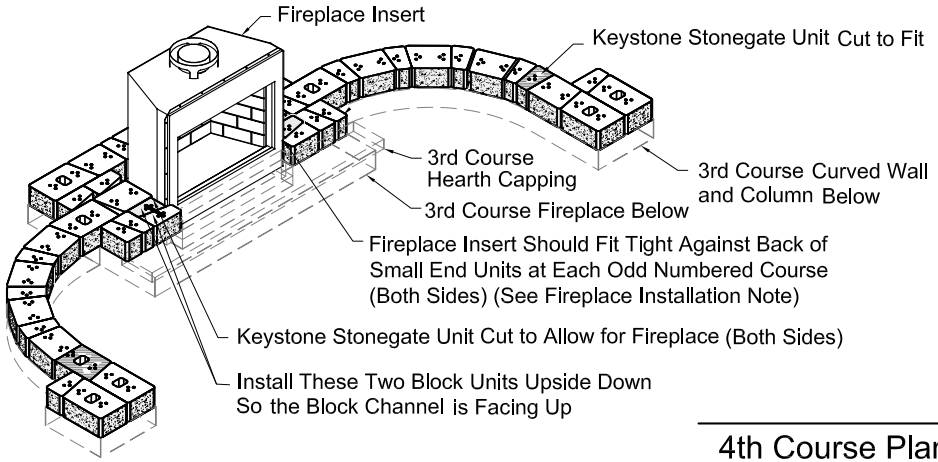

Fireplace Note:
Install fireplace and chimney components as per fireplace manufacturers installation instructions.

4th Course Plan

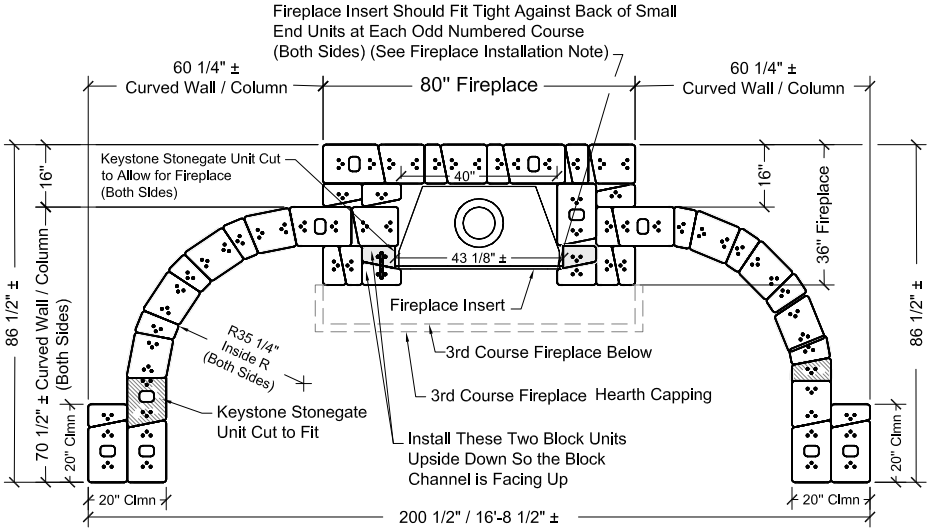

Block Cutting Note:
Using a concrete saw or wheel grinder tool w/masonry disk, cut block units as needed.
Block units to be cut due to obstruction are labeled with solid hatching.
Block units to be cut to fit are labeled with angular hatching.

Fireplace Installation Note:
The installed fireplace front outside corners of the fireplace insert face should contact the small end units at the inside end of the two inside walls. If the fireplace insert does not contact the small units at each side, trim the front and or side units below to allow the fireplace insert to move forward to contact the small units at each odd numbered course.

4th Course Capping Isometric

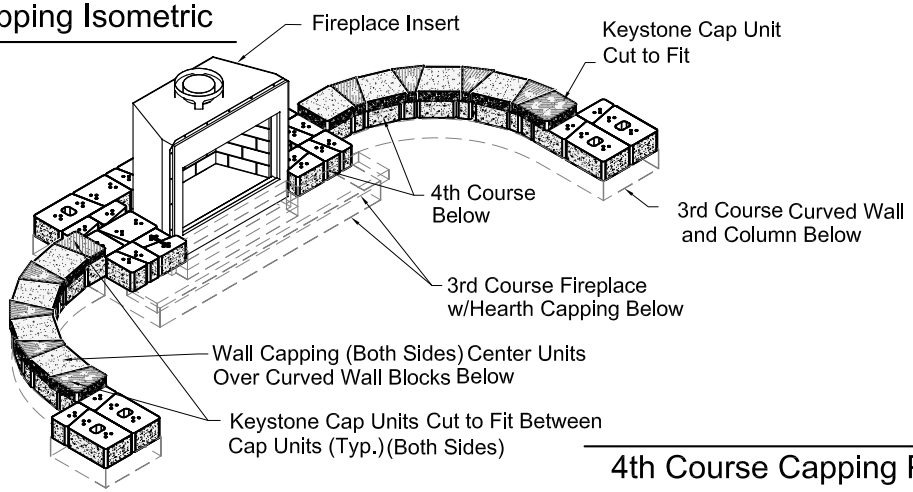

4th Course Capping Plan

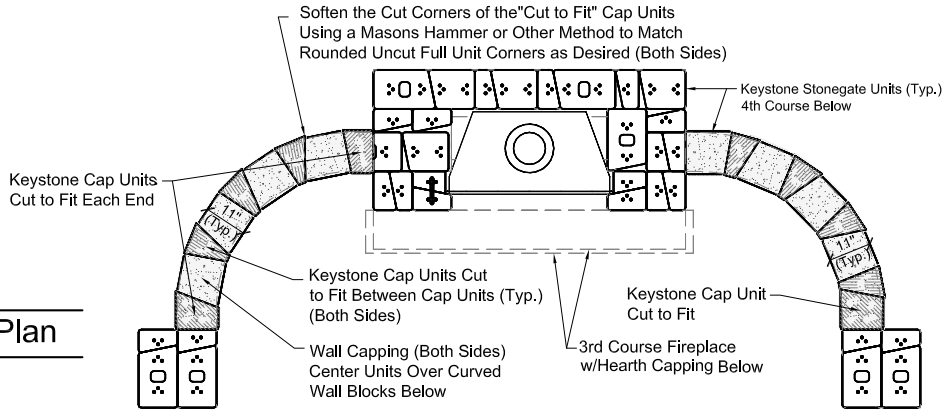

Cap Cutting Note:
Using a concrete saw or wheel grinder tool w/masonry disk, cut block units as needed
Cap units to be cut due to obstruction are labeled with solid hatching.
Cap units to be cut to fit are labeled with angular hatching.

Curved Wall Capping Note:
4th course curved wall capping can be placed after 5th course fireplace/column is in place (not shown here for display purposes)

5th Course Isometric

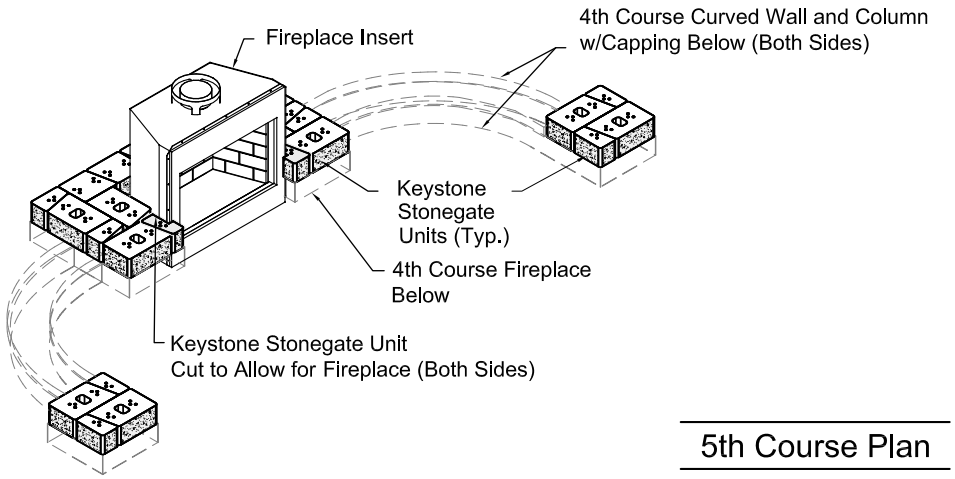

5th Course Plan

Fireplace Note:
Install fireplace and chimney components as per fireplace manufacturers installation instructions.

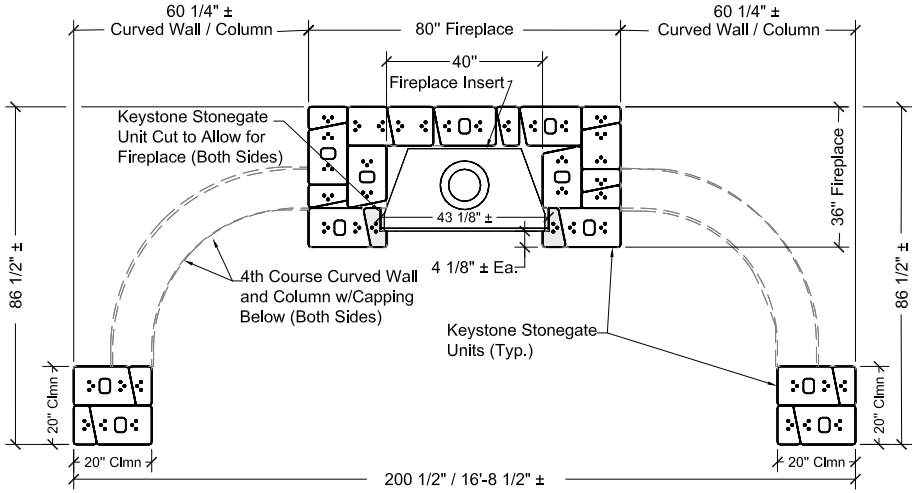

6th Course Isometric

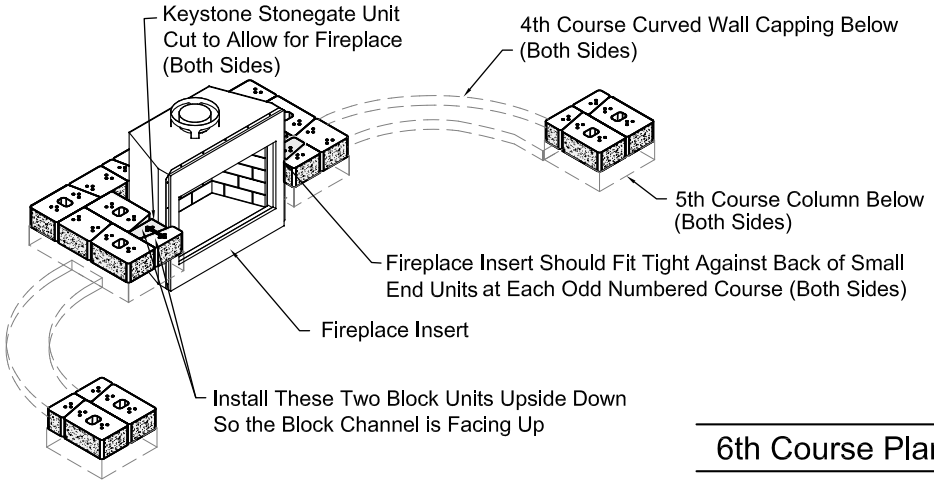

6th Course Plan

Block Cutting Note:
Using a concrete saw or wheel grinder tool w/masonry disk, cut block units as needed.
Block units to be cut due to obstruction are labeled with solid hatching.
Block units to be cut to fit are labeled with angular hatching.

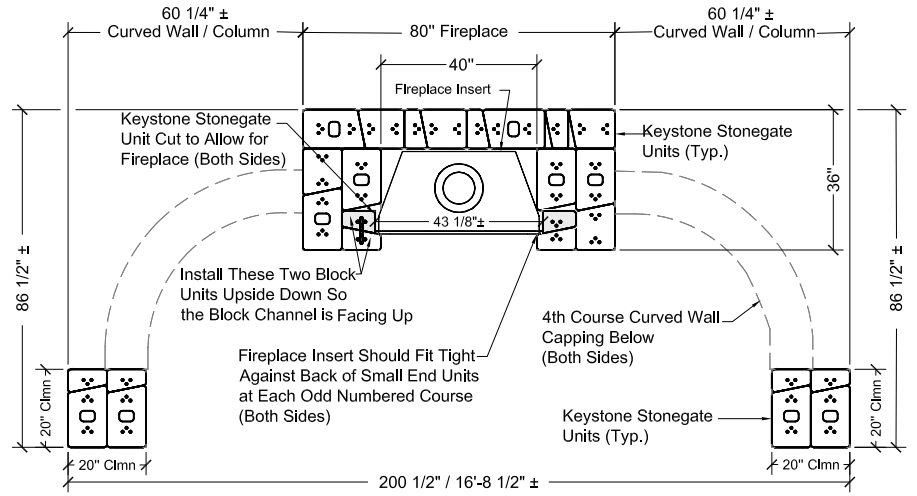

COURSE BY COURSE INSTRUCTIONS

6th Course Capping Isometric

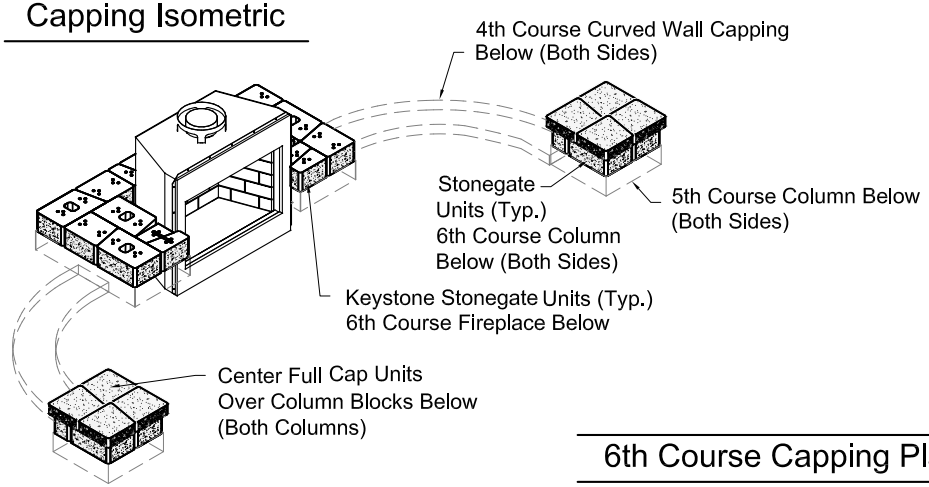

Fireplace Note:
Install fireplace and chimney components as per fireplace manufacturers installation instructions.

6th Course Capping Plan

Cap Cutting Note:
Using a conccrete saw or wheel grinder tool w/masonry disk, cut block units as needed
Cap units to be cut due to obstruction are labeled with solid hatching.
Cap units to be cut to fit are labeled with angular hatching.

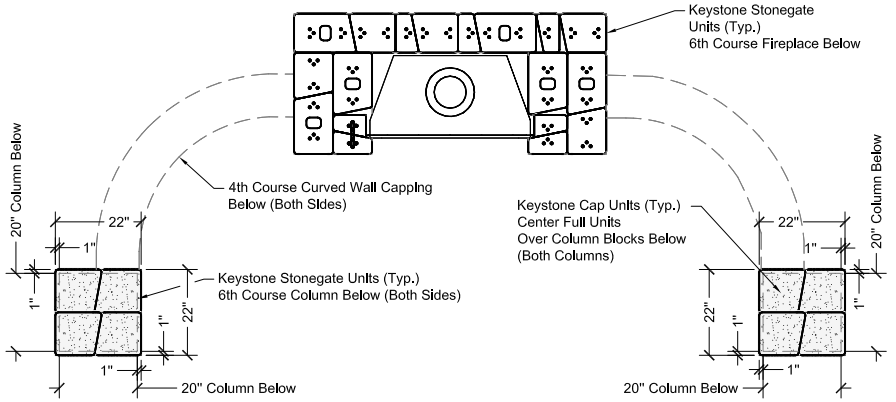

7th Course Isometric

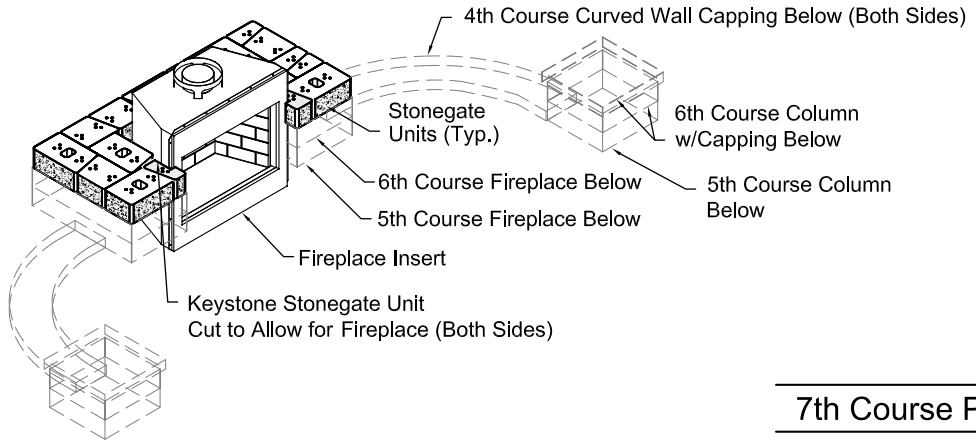

7th Course Plan

Block Cutting Note:
Using a concrete saw or wheel grinder tool w/masonry disk, cut block units as needed.
Block units to be cut due to obstruction are labeled with solid hatching.
Block units to be cut to fit are labeled with angular hatching.

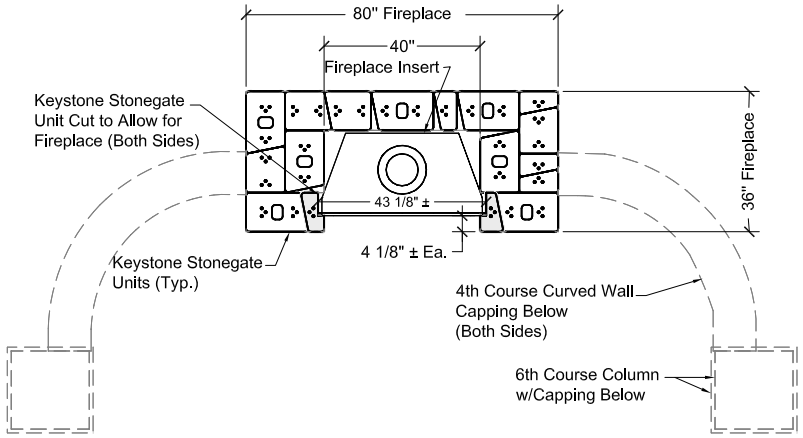

8th Course Isometric

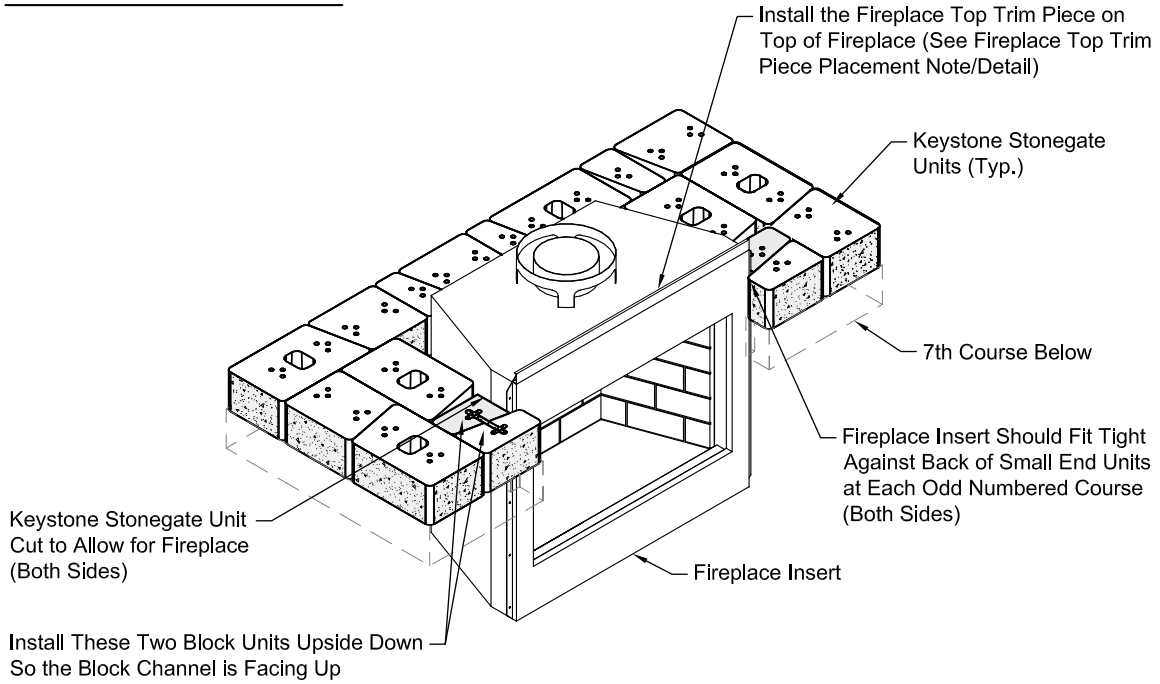

Fireplace Top Trim Piece Placement Note:
For proper removal of the top trim piece stainless steel face protective wrap prior to installing the top trim piece, peel back the bottom portion of the protective wrap where it will come in contact with the top of the fireplace. Using a Phillips head pattern screwdriver, loosen and remove existing firebox cabinet front top screws. Place supplied top trim piece across the front top of firebox cabinet aligning the top trim piece holes with the existing screw holes and flush with the front face of the firebox cabinet. Reinstall removed screws through the top trim piece and into the existing holes and secure the top trim piece to the fireplace cabinet.

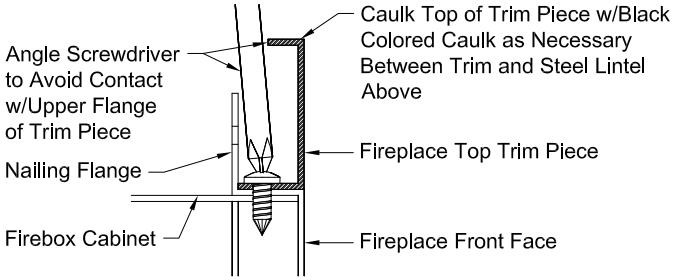

Fireplace Top Trim Piece Detail

8th Course Plan

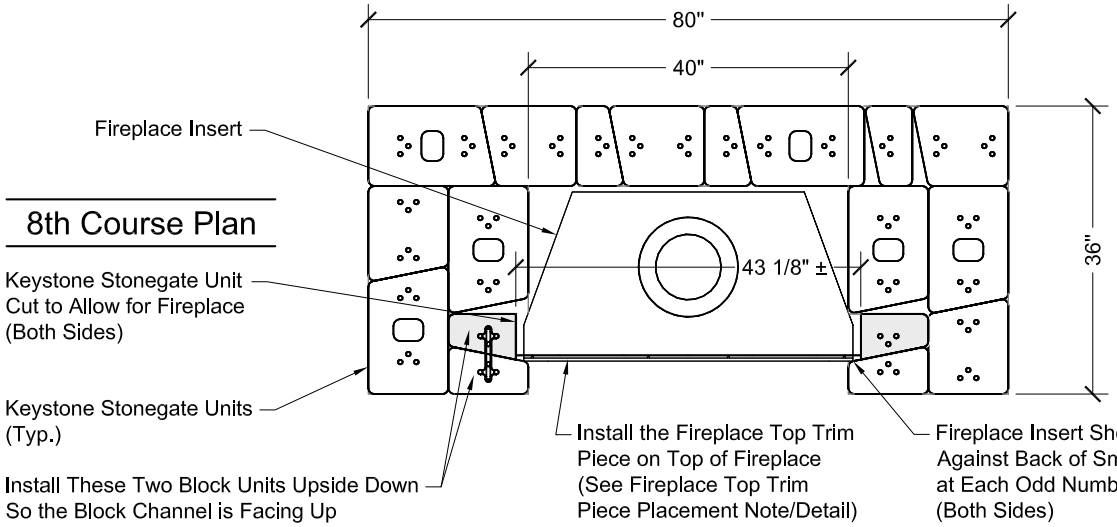

9th Course Isometric

Fireplace Note:
Install fireplace and chimney components as per fireplace manufacturers installation instructions.

Note:
Steel lintel installer to remove the two (2) front S.S. top spacers on supplied fireplace insert that will conflict w/steel lintel. Remove screws and remove brackets, they will not be needed.

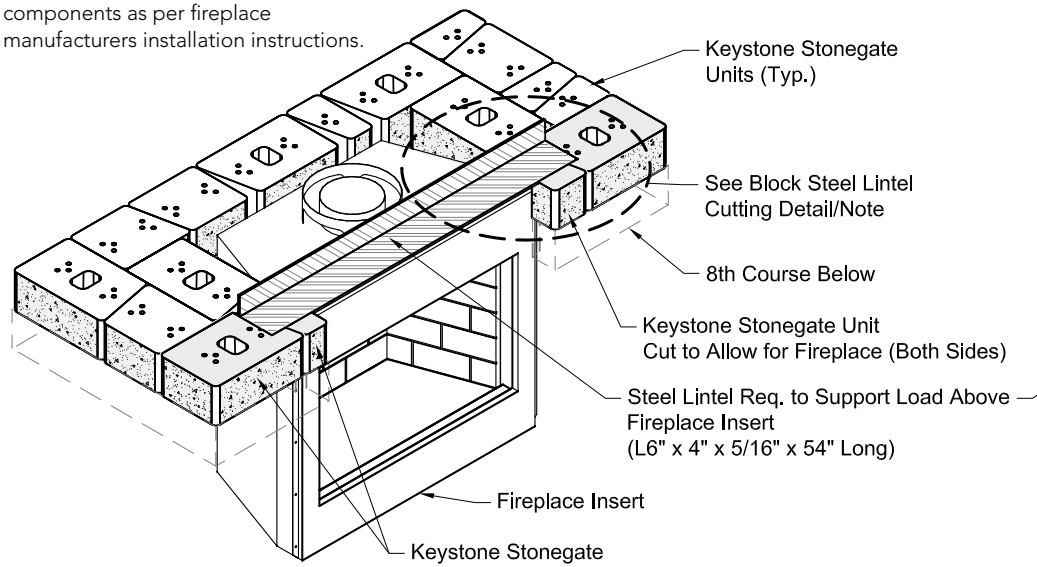

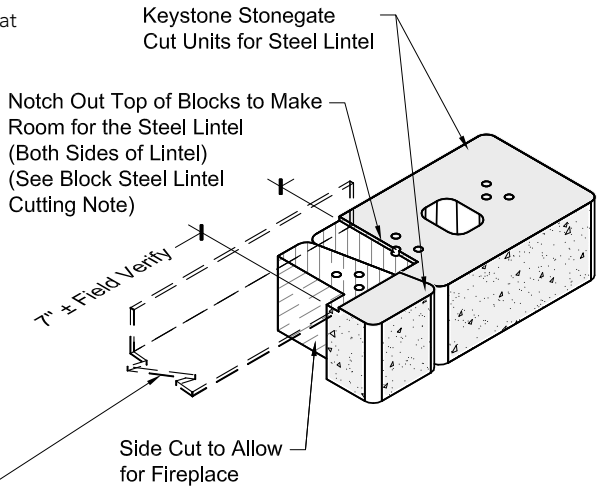

Block Steel Lintel Cutting Detail

Block Steel LIntel Cutting Note:
Position steel lintel to allow a minimum of 1/2" space between the steel lintel and the fireplace flue.

Prior to installing steel lintel, use a wheel grinding tool to notch out top of block creating a level shelf to place steel lintel, such that lintel is flush with top of cut block. Block units to be cut for steel lintel are shown with solid hatching.

9th Course Plan

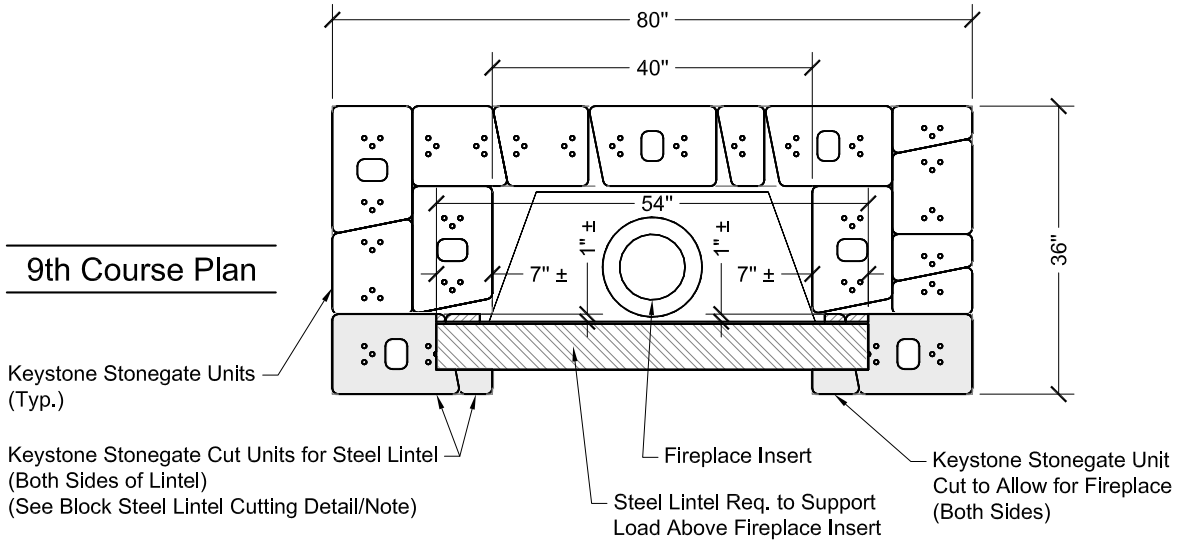

10th Course Isometric

Fireplace Note:
Install fireplace and chimney components as per fireplace manufacturers installation instructions.

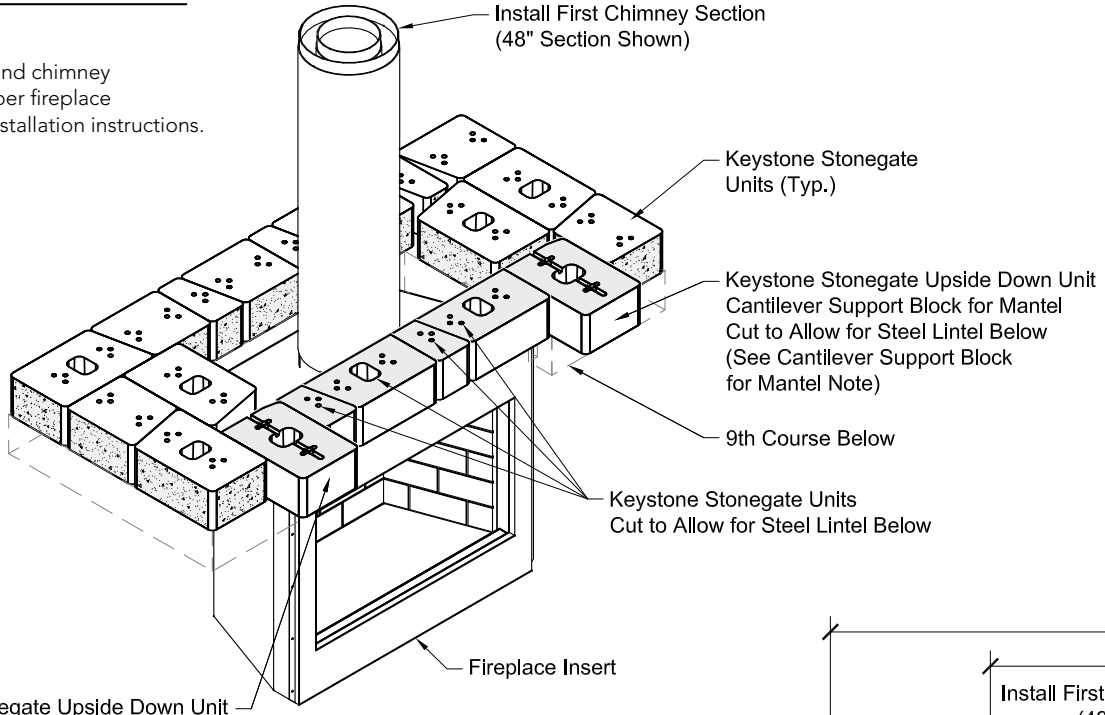

Cantilever Support Block for Mantel Note:
Install cantilever support blocks for the mantel upside down so the block channel is facing up. Pin holes from underside of inverted units should be used to attach the mantel piece w/lag bolts and washers.

Temporary Block Support Note:
Build temporary support up from 2nd course hearth capping to support blocks resting on steel lintel using wood or other rigid support material until sufficient weight from courses above will safely hold steel lintel block in place, then remove temporary support.

Block Cutting Note:
Using a concrete saw or wheel grinder tool w/masonry disk, cut block units as needed. Block units to be cut due to obstruction are labeled with solid hatching. Block units to be cut to fit are labeled with angular hatching.

10th Course Plan

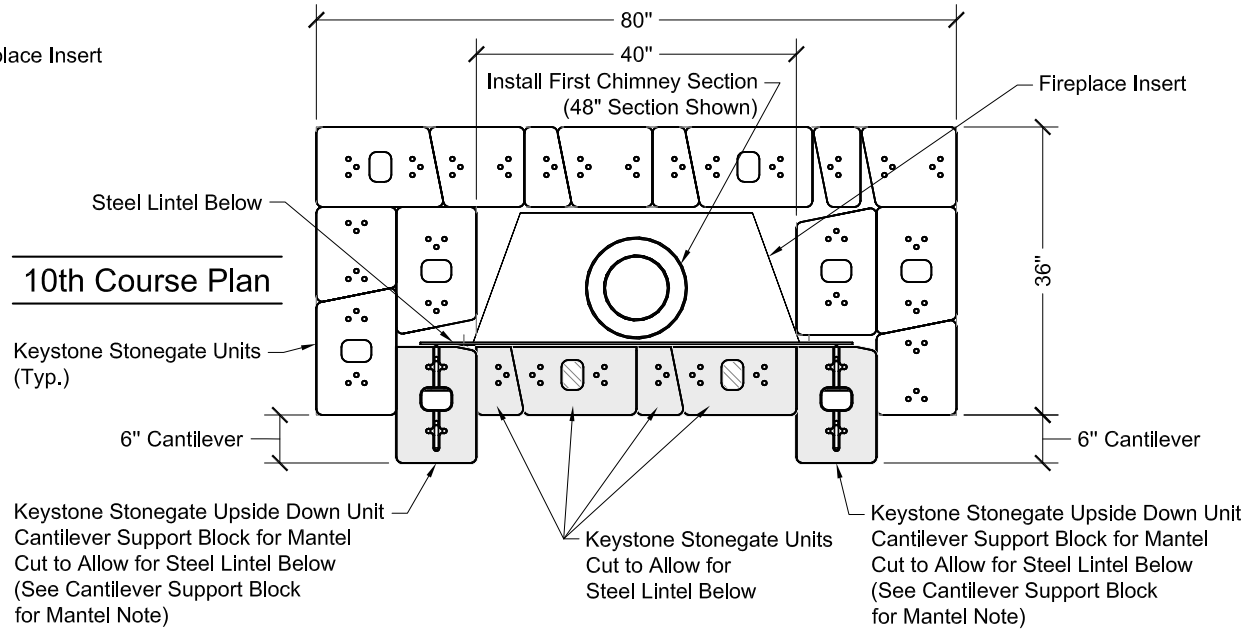

10th Course Mantel Isometric

Fireplace Note:
Install fireplace and chimney components as per fireplace manufacturers installation instructions.

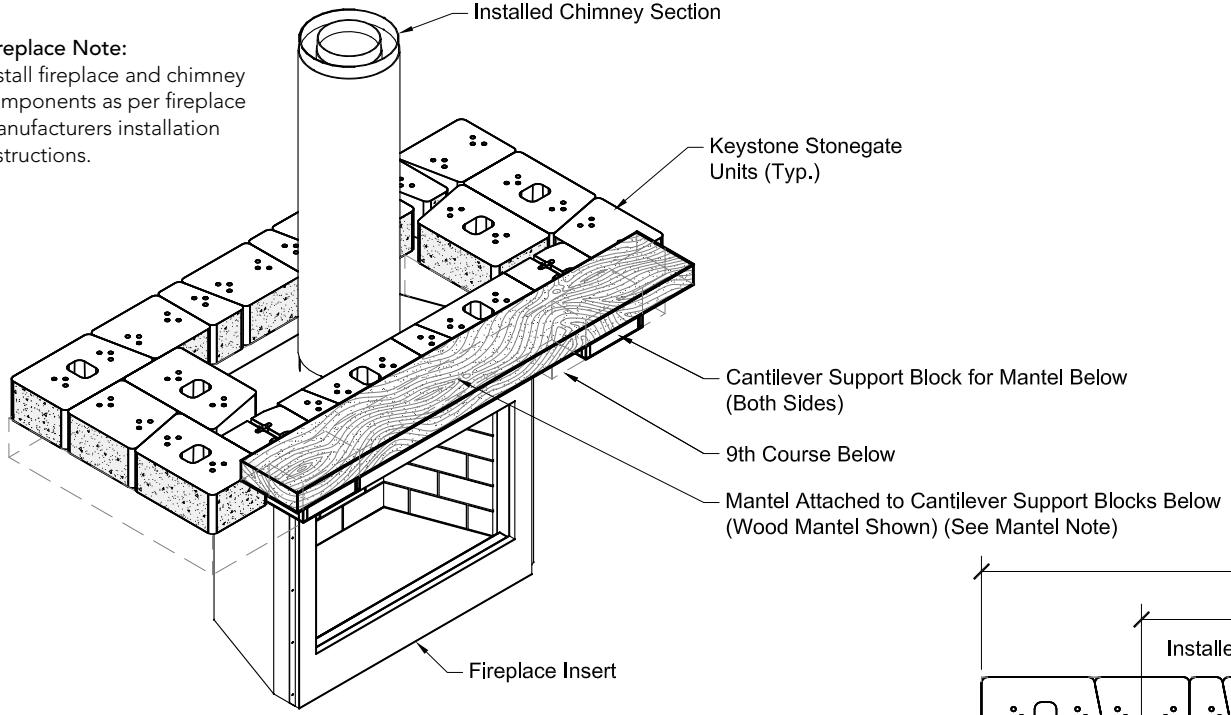

Mantel Note:
Mantel piece as per home owners interest.

Pin holes and channels in the cantilever blocks may be used to attach the mantel piece.

Attach mantel piece once fireplace and chimney build out is completed.

For Wood Mantel:
Once fireplace and chimney build out is completed, attach the mantel to the cantilever blocks using minimum 3/8" steel lag bolts w/washers to fasten to mantel above.

10th Course Mantel Plan

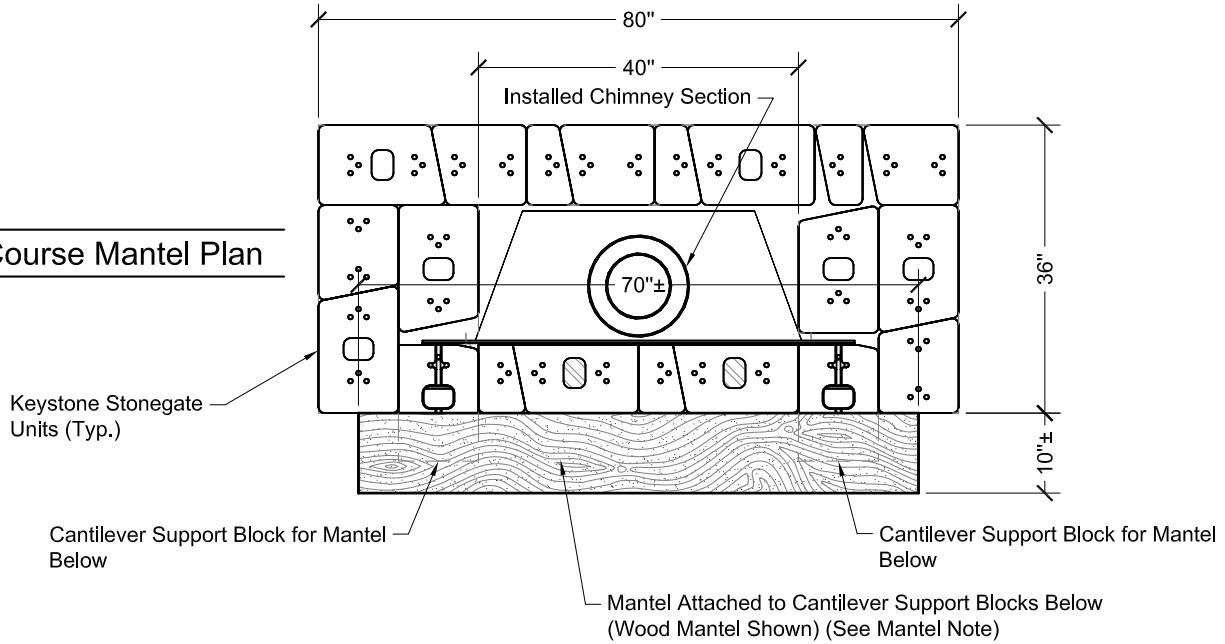

11th Course Isometric

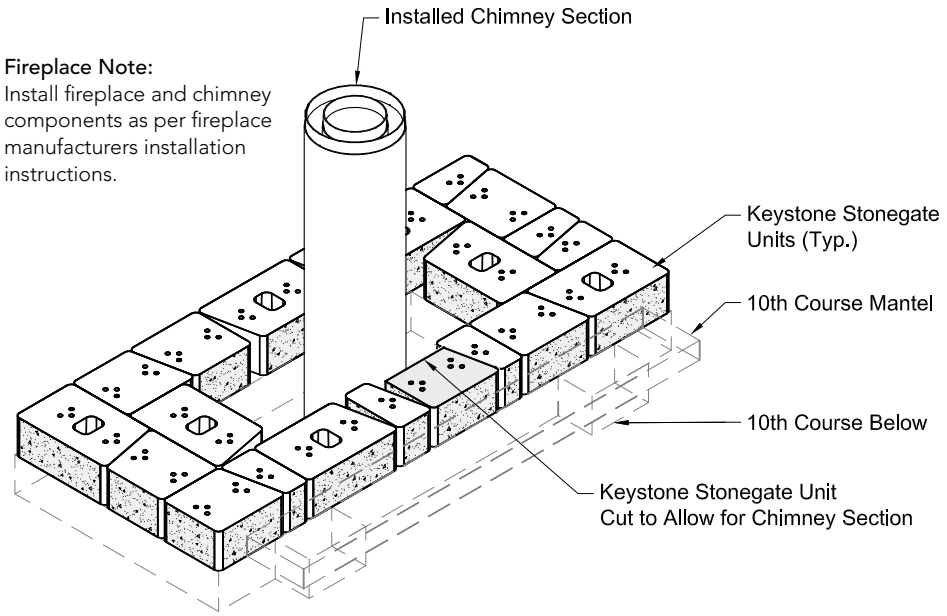

Fireplace Note:
Install fireplace and chimney components as per fireplace manufacturers installation instructions.

Block Cutting Note:
Using a concrete saw or wheel grinder tool w/masonry disk, cut block units as needed. Block units to be cut due to obstruction are labeled with solid hatching. Block units to be cut to fit are labeled with angular hatching.

11th Course Plan

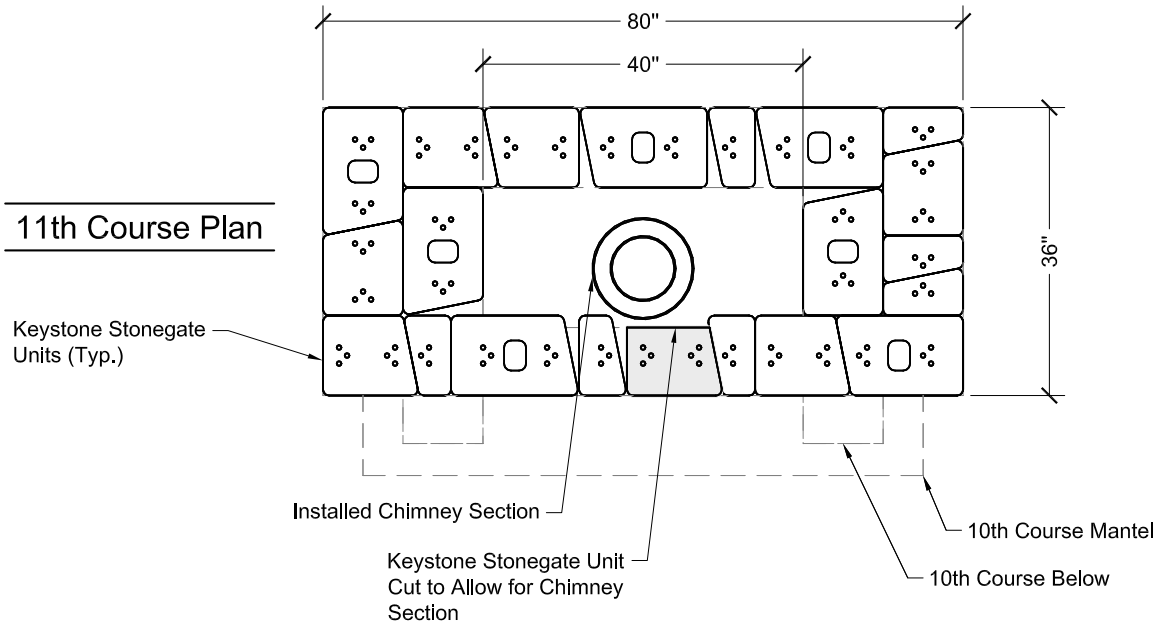

COURSE BY COURSE INSTRUCTIONS

12th Course Isometric

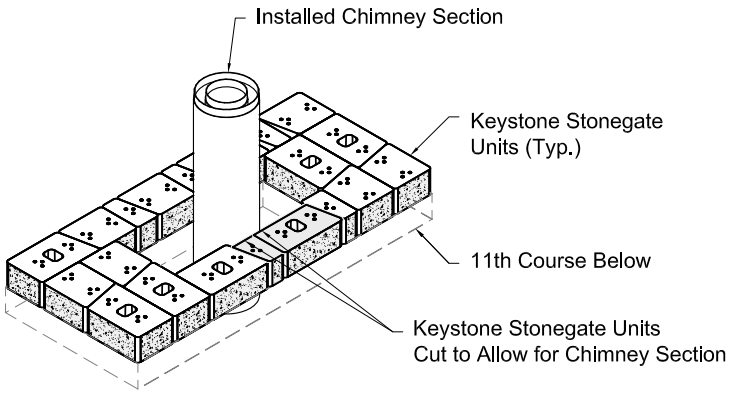

Fireplace Note:
Install fireplace and chimney components as per fireplace manufacturers installation instructions.

Block Cutting Note:
Using a concrete saw or wheel grinder tool w/masonry disk, cut block units as needed. Block units to be cut due to obstruction are labeled with solid hatching. Block units to be cut to fit are labeled with angular hatching.

12th Course Plan

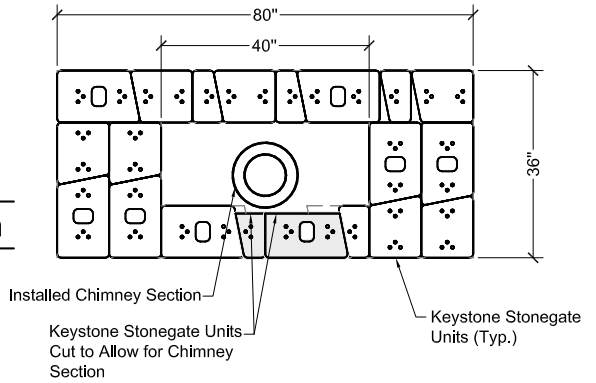

12th Course Capping Isometric

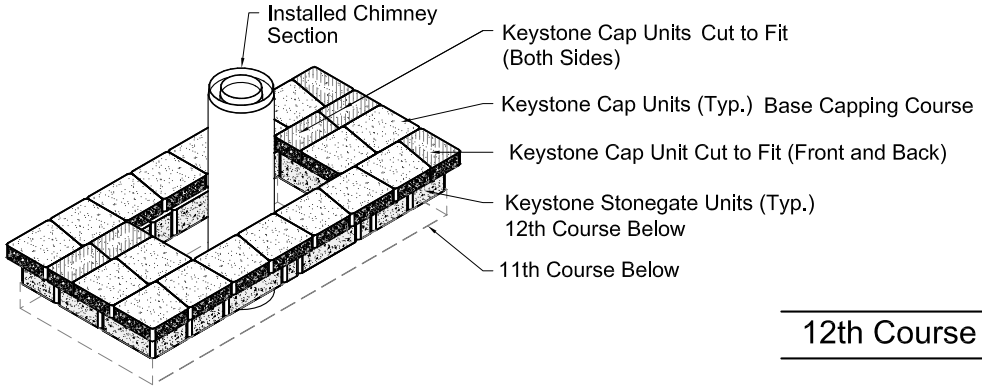

Cap Cutting Note:
Using a conccrete saw or wheel grinder tool w/masonry disk, cut block units as needed
Cap units to be cut due to obstruction are labeled with solid hatching.
Cap units to be cut to fit are labeled with angular hatching.

12th Course Capping Plan

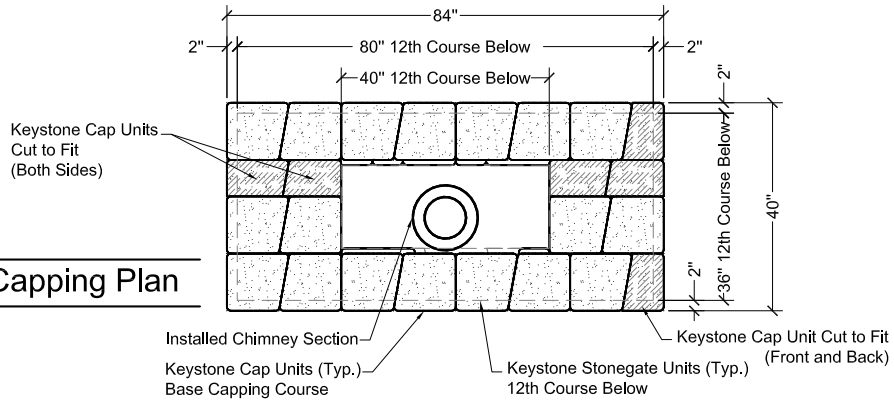

13th Course Isometric

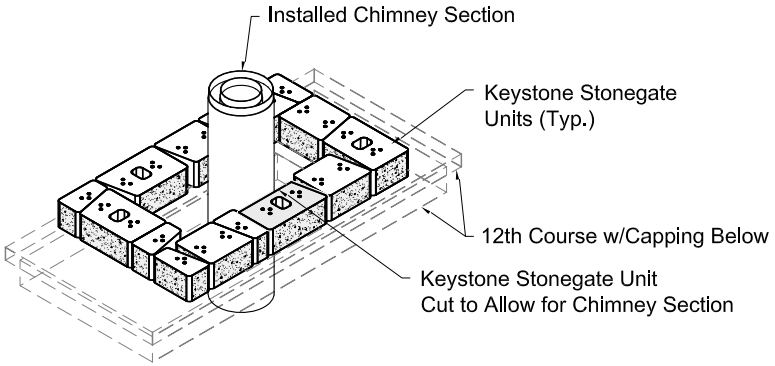

Fireplace Note:
Install fireplace and chimney components as per fireplace manufacturers installation instructions.

Block Cutting Note:
Using a concrete saw or wheel grinder tool w/masonry disk, cut block units as needed. Block units to be cut due to obstruction are labeled with solid hatching. Block units to be cut to fit are labeled with angular hatching.

13th Course Plan

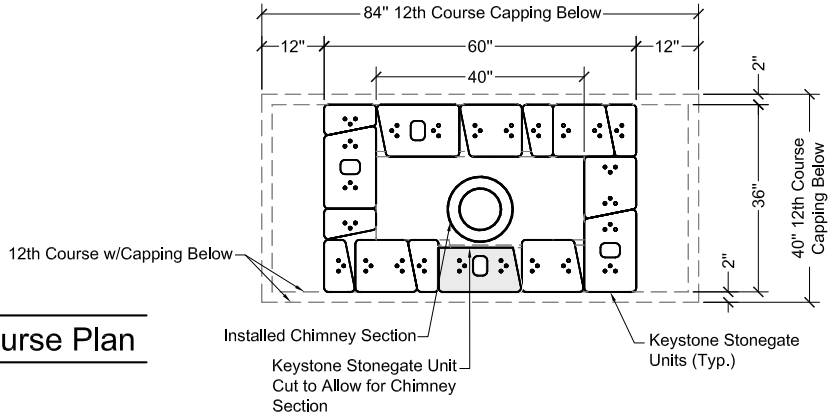

14th Course Isometric

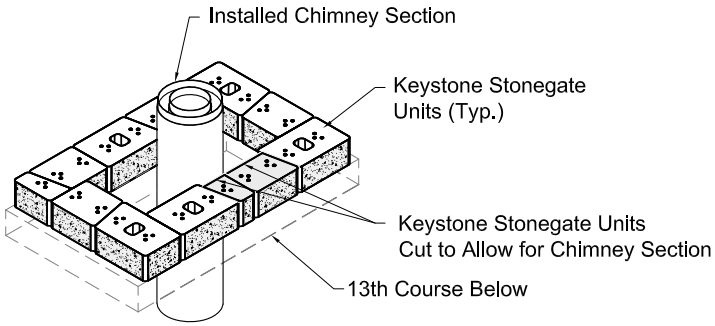

14th Course Plan

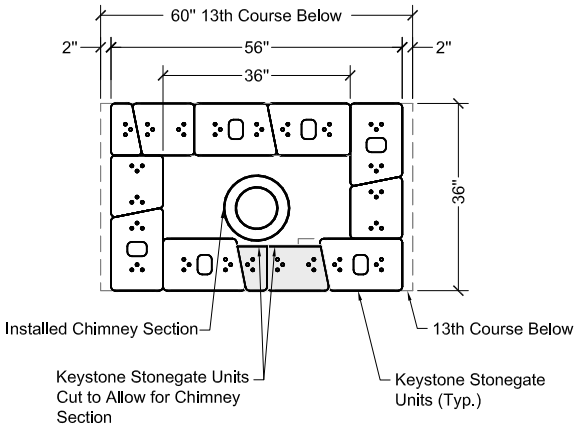

COURSE BY COURSE INSTRUCTIONS

15th Course Isometric

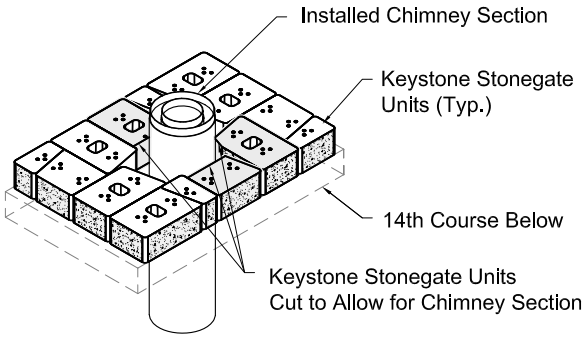

Fireplace Note:
Install fireplace and chimney components as per fireplace manufacturers installation instructions.

Block Cutting Note:
Using a concrete saw or wheel grinder tool w/masonry disk, cut block units as needed. Block units to be cut due to obstruction are labeled with solid hatching. Block units to be cut to fit are labeled with angular hatching.

15th Course Plan

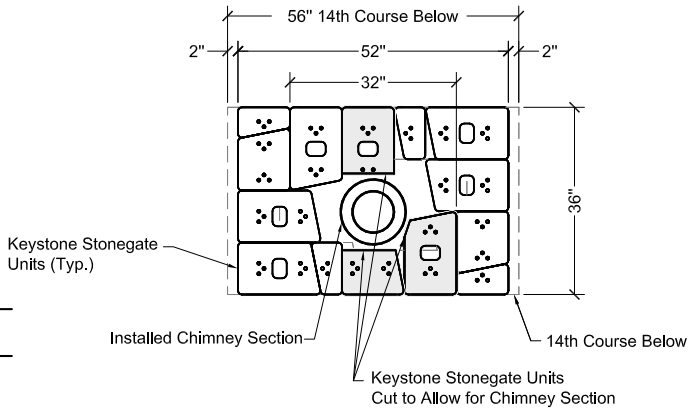

15th Course Capping Isometric

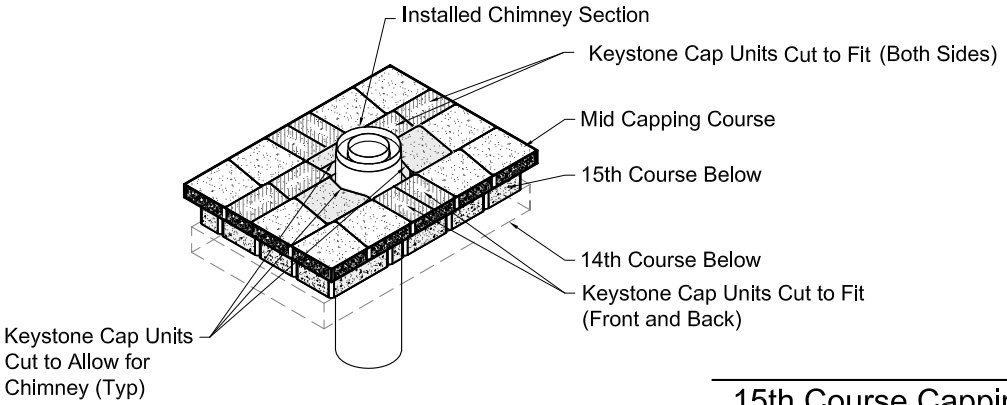

15th Course Capping Plan

Cap Cutting Note:
Using a conccrete saw or wheel grinder tool w/masonry disk, cut block units as needed
Cap units to be cut due to obstruction are labeled with solid hatching.
Cap units to be cut to fit are labeled with angular hatching.

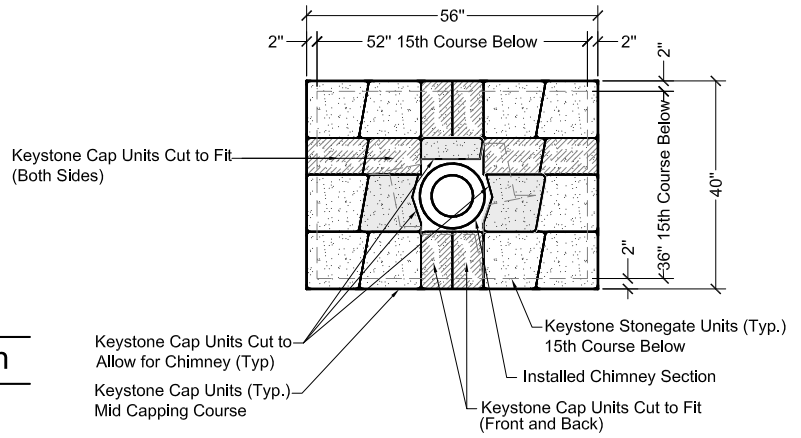

16th Course Isometric

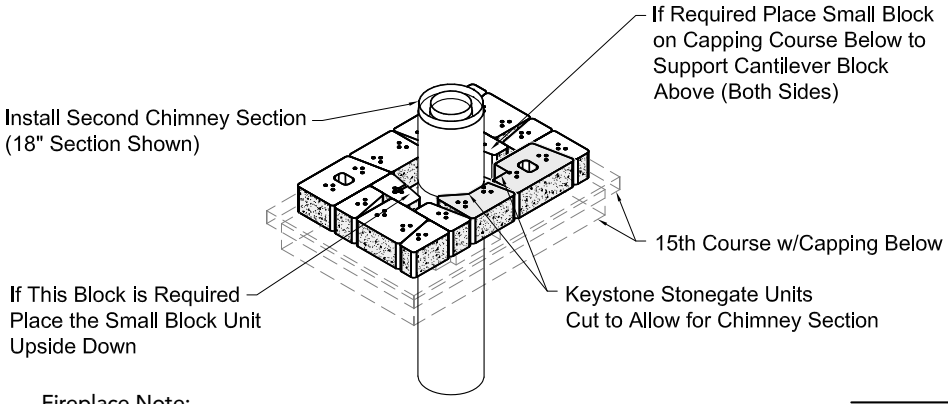

Fireplace Note:
Install fireplace and chimney components as per fireplace manufacturers installation instructions.

Block Cutting Note:
Using a concrete saw or wheel grinder tool w/masonry disk, cut block units as needed. Block units to be cut due to obstruction are labeled with solid hatching. Block units to be cut to fit are labeled with angular hatching.

16th Course Plan

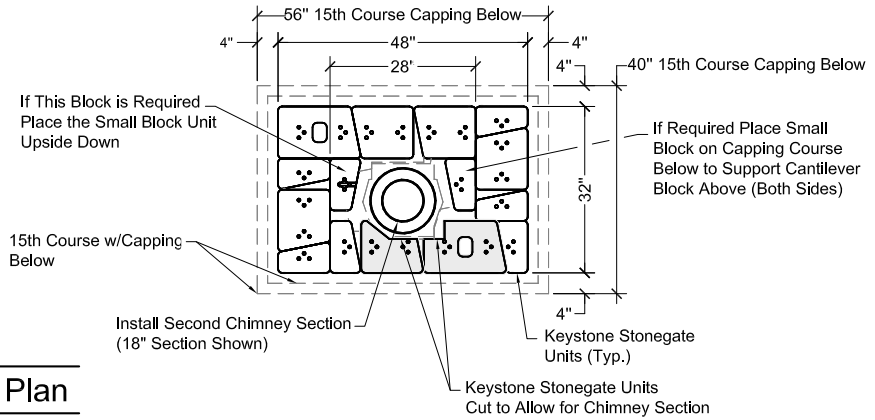

17th Course Isometric

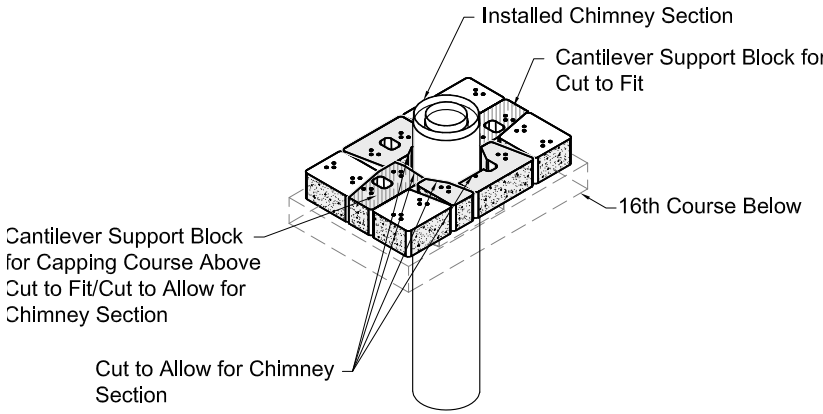

17th Course Plan

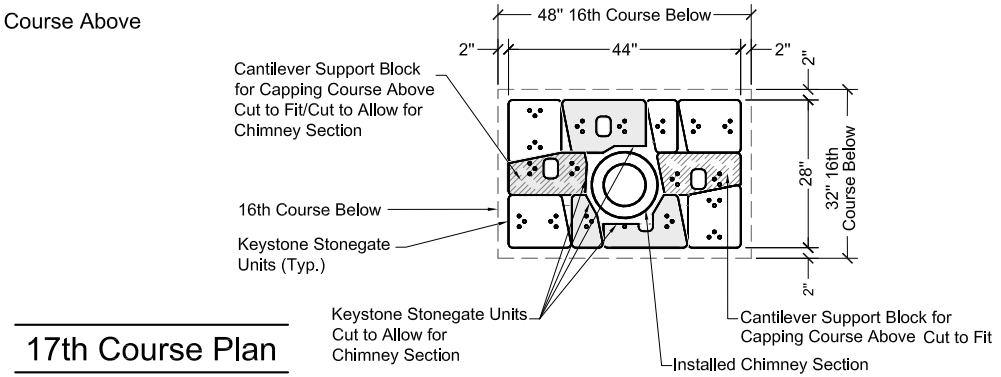

COURSE BY COURSE INSTRUCTIONS

17th Course Capping Isometric

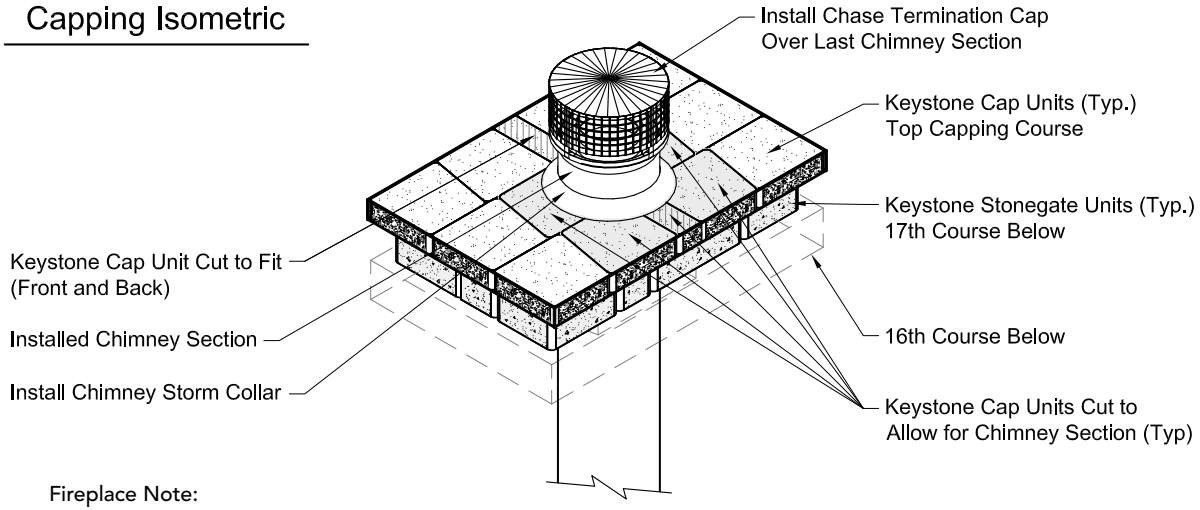

Cap Cutting Note:
Using a conccrete saw or wheel grinder tool w/masonry disk, cut block units as needed
Cap units to be cut due to obstruction are labeled with solid hatching.
Cap units to be cut to fit are labeled with angular hatching.

Note:
Install storm collar over chimney and down to top capping course prior to installing chase termination cap. Seal as per fireplace manufacturers installation instructions.

Fireplace Note:
Install fireplace and chimney components as per fireplace manufacturers installation instructions.

17th Course Capping Plan

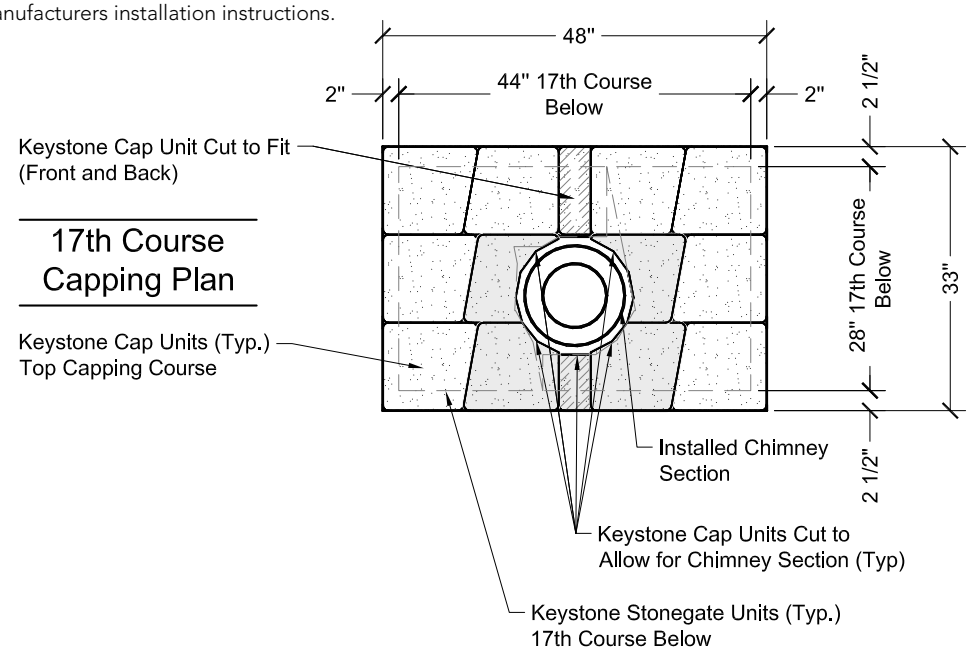

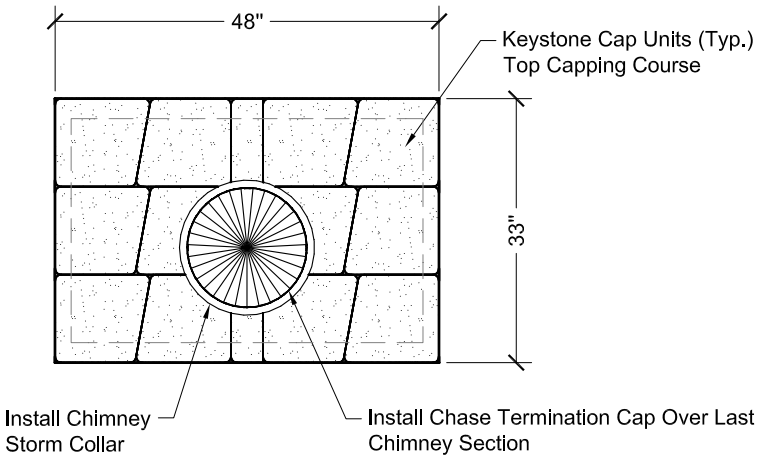

17th Course Capping w/Termination Cap Plan

Don’t forget to check out all of our Keystone Outdoor Living designs on keystonewalls.com.

Outdoor Kitchen Designs

Fireplaces

Columns

Fire Pits

Water Feature

Bench

Keystone Retaining Wall Systems LLC
4444 West 78th Street • Minneapolis, MN 55435
(952) 897-1040 • **www.keystonewalls.com**

FOLLOW US

We reserve the right to improve our products and make changes in the specifications and design without notice. The information contained herein has been compiled by KEYSTONE and to the best of our knowledge, accurately represents the KEYSTONE product use in the applications which are illustrated. Final determination of the suitability for the use contemplated and its manner of use are the sole responsibility of the user.

Sbs FP3pcWB - 0118

©2018 Keystone Retaining Wall Systems LLC